TARRANT COUNTY

PURCHASING DEPARTMENT

MELISSA LEE, C.P.M, A.P.P.
PURCHASING AGENT

CHRIS LAX, CPSM
ASSISTANT

JULY 29, 2021

RFB NO. 2021-105

ADDENDUM NO. 3

SUBCOURTHOUSE IN ARLINGTON FINISH-OUT AND RENOVATION

BIDS DUE AUGUST 5, 2021 AT 2:00 P.M.

1. CHANGES:

A. See attached revisions to Specifications and Drawings.

2. QUESTIONS AND RESPONSES:

A. Questions received by the due date and their responses are included in this Addendum No. 3 on the following page(s).

This Addendum No. 3 must be signed and the original and one (1) copy must be returned with Bid!

NAME AND ADDRESS OF COMPANY:

_____

_____

_____

_____

E-Mail Address_____

AUTHORIZED REPRESENTATIVE:

Signature _____

Name _____

Title _____

Tel. No. _____

Fax No:_____

QUESTIONS AND RESPONSES

1. Finish plan 4.12 calls for base BPT in shower 300B. BPT base is not listed as a finish, what is wanted here?

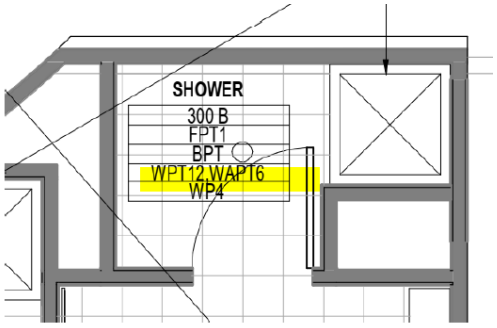

RESPONSE:

No base PT; WPT goes to floor.

2. The finishes list Bestbath Molton Stone as the shower finish, is this for both the floor and walls?

RESPONSE:

Bestbath shower is a one piece unit with floor and 3 sides.

3. Page 4.12 has a note to add tile to wall above shower unit. To What height does the shower unit go to?

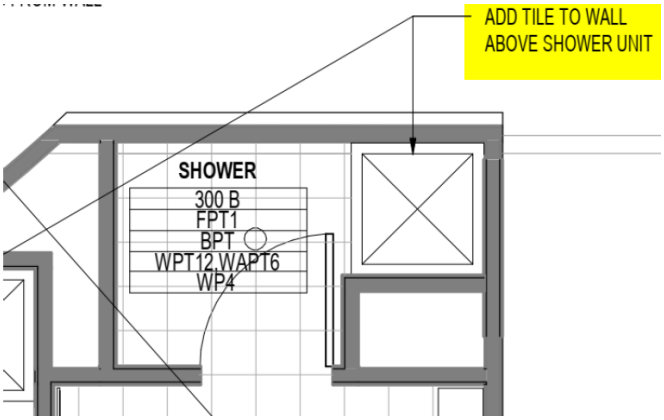

RESPONSE:

Height is 78- 5/8" model # listed on sheet P4.1.

QUESTIONS AND RESPONSES

4. Is roof under warranty?

   a. If so, who is the vendor?

   RESPONSE:
   Yes.

   b. Siplast – Guarantee No. 34430

5. Are there any mandated Fire Suppression vendors required?

   RESPONSE:
   Fire Panel is Edwards Est
   Fire Alarm is Edwards Est (Proprietary).

6. Will successful contractor have access at all times?

   RESPONSE:
   Refer to Section 02 41 21 work at existing facility and 010300 alternates.

7. Is there a freight elevator on site to bring materials to worksite?

   RESPONSE:
   Refer to 02 41 21 work at existing facility 3.05. E.

8. What are the working hours for this project? In other words, do I need to quote regular hours or premium hours for this job?

   a. Is there any weekend work required?

   RESPONSE:
   Refer to 01 03 00 alternates 1.04.
   a. Refer to 01 03 00 alternates 1.04

9. Will contractor be required to move furniture and pictures on walls as they perform the work?

   RESPONSE:
   Yes, refer to 02 41 21 work at existing facility part 3. Execution 3.01
   The Contractor will be responsible for moving all furniture.
   Tarrant County will be responsible for moving all pictures and personal belongings.

10. At the pre-bid meeting it was stated that the demising wall would have to be build first. Why does this have to be built first?

    a. What is the deck height?

    RESPONSE:
    This is a working facility, so sound, dust, etc. must be mitigated.
    a. 14’ 0”

QUESTIONS AND RESPONSES

11. Will Tarrant County be responsible for the data drop for conduit?

RESPONSE:
Refer to 27 05 28 empty conduit systems.
Yes, Tarrant County will be responsible for all structured cabling work. Infrastructure (conduit, back box, pull string) by Contractor.

12. Is Tarrant County paying for building permits or any revisions?

RESPONSE:
Refer to 01 02 00 1.12 Permitting
Refer to 010100- 1.04 Summary of Work.

13. Is there a hard date that Tarrant County must have this project completed?

RESPONSE:
No, Contractor shall provide total number of calendar days to complete the project in the space provided on the Price Proposal Form.

14. Will Background Checks be required?
    a. To what extend do they go?
    b. What are they looking for?

RESPONSE:
Yes, Refer to Special terms and conditions of contract #13 Criminal background check (p.10 of Vol.1).

a. See above.

Background checks are reviewed on a case by case basis. All incidents should be recorded on the form. If information comes back listing an incident(s) that was not identified on the form, it could lead to the background check being rejected, based solely on incomplete information being provided. Do not leave any blanks on the form. Often times individuals are not approved because they fail to disclose; not because they have tickets or violations.

b. See above.

15. Will there be an opportunity to have a site visit to inspect current condition?

RESPONSE:

There have been two (2) walk-throughs: June 30th and July 16th.

16. If we do have an opportunity to have a site visit, are we allow to take pictures?

RESPONSE:
Yes, no people (TL employees) in phot

17. Will an alternate lighting package be acceptable?

RESPONSE:
Refer to 01 60 00

1.05.F Request for substitution submittal posted to bid.

QUESTIONS AND RESPONSES

18. Who monitors the fire alarm for the building?

RESPONSE:
Interface Security.

19. Can you confirm who is responsible for the data cabling and devices?

RESPONSE:
See response to Question No. 11.

20. Can you confirm who is responsible for security and access system?

RESPONSE:
Refer to 01 50 00 1.03 Security.
Refer to 02 41 21 1.03. D.
Access to facility will be coordinated through Tarrant County's project manager.

21. Will the building be available during normal hours?

RESPONSE:
See response to Question No. 6.

22. Is there special badging to work in the building?

RESPONSE:
Refer to 02 41 21 3.05.C.

23. Can you share with us the type of lighting control is currently in the building?

RESPONSE:
Douglas.

24. Can you share the type of building automation that is currently in the building?

RESPONSE:
Building Controls is Reliable Controls
Building Controls Vendor is Environmatic Systems.

25. Is there a minority participation requirement for this project?

RESPONSE:
Refer to Tarrant County Historically Underutilized Business (HUB) Policy on page 64 of Vol. 1.

26. Is there a bond requirement for this project?

RESPONSE:
Refer to p. 6 of Vol. 1 "Bond Requirements".

QUESTIONS AND RESPONSES

27. Can we submit a request for substitution for material not called out on the drawing?

RESPONSE:
Yes. The substitution process is for a contractor who plans on bidding this project and would like to bid another product that is an equal (Reference Volume 1, Page 3 – "substitutions").

28. Can you help me determine what the existing fire alarm manufacturer & model # is for the system for the Arlington Subcourthouse renovation?

RESPONSE:
Edwards Est Model #EST3.

29. How big is the elevator we are to use? Is it big enough to bring our longer items to the second and third floor?

RESPONSE:
The elevator dimensions are 78" x 64" x 8' 10".

30. Are there any freight elevators?

RESPONSE:
No.

31. Room 303 calls us to supply Cardio Mats. (what materials do they want these made from?) Not talking about the flooring just the Mats.

RESPONSE:

Cut mats to be same material and color as flooring, but 4' x 6'.

Added to Addendum #3.

32. Do we have existing fire sprinkler shop drawings that you can provide?

RESPONSE:

TBD- if available, they will be provided to awarded contractor.

33. Will all the items on the 3rd floor be moved by Tarrant County Staff before Contractor begins work?

RESPONSE:

Sheet 2.5 NB #2

All items outside the Commissioner's Office (Break Room. Shell Space) will be moved prior to start of work.

34. Where will the contractor be able to place their dumpster?

RESPONSE:

Sheet 1.5 NB #2.

QUESTIONS AND RESPONSES

35. Are there any electrical panels on 2nd floor area?

    a. What is feeding existing finish out?

    RESPONSE:

    Sheet E 2.1 drawing 1.

    a. See above.

36. Can I get approval to substitute American Specialties for the following: I have submitted the specs and all the back up.

    a. Visual Display Surfaces
    b. Toilet Compartments
    c. Metal Lockers
    d. Toilet, Bath, and Laundry Accessories

    RESPONSE:

    Substitution request responses attached.

37. Who is the current fire Sprinkler and alarm company that is being used at this facility?

    RESPONSE:

    See response to Question No. 28.

38. Who carries the existing roof warranty? During the pre-bid, site personnel said it had no warranty, but when looking at the labels, it did show to still be under warranty.

    RESPONSE:
    See response to Question No. 4.

39. Who is the current ac controls company for this facility?

    RESPONSE:
    Reliable Controls.

40. Who is the current security systems company for this facility?

    RESPONSE:
    Interface Security.

41. It is my understanding the scope include add and relocate alarm devices. Please provide manufacturer and/or monitoring contractor for the fire alarm system.

    RESPONSE:
    See response to Question No. 28.

LBL ARCHITECTS
Listen. Build. Lead.

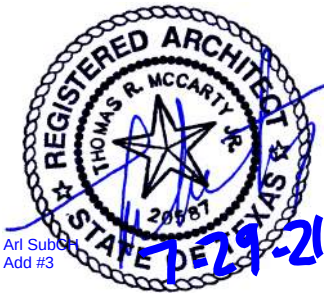

TARRANT COUNTY SUBCOURTHOUSE IN ARLINGTON
FINISH-OUT AND RENOVATION
COMM. NO. 1025
July 29, 2021

ADDENDUM NO. 3
TO THE DRAWINGS AND PROJECT MANUAL (dated 03-04-21)

ARCHITECTURAL SPECIFICATIONS

2.1 TABLE OF CONTENTS
Before DIVISION 1 – GENERAL REQUIREMENTS, add the following Divisions to read as follows: "BIDDING REQUIREMENTS – Refer to Volume 1 prepared by Tarrant County" and "GENERAL CONDITIONS – Refer to Volume 1 prepared by Tarrant County".

2.1 SECTION 01 01 00 – SUMMARY OF WORK
a. 1.03 Definitions paragraph A. remove STRUCTURAL ENGINEERS and Lalonde Engineering information from this paragraph.
b. 1.04 Summary of Work paragraph B. Remove the words "shower curtains" from this sentence.

2.2 SECTION 01 02 00 CONTRACT CONSIDERATIONS
Add paragraph 1.16 SUPERVISION OF WORK to read as follows: "A. General Contractor shall provide an onsite superintendent 100% of the time any work is being performed on site."

2.3 SECTION 07 21 00 – THERMAL INSULATION
2.02 Sound Attenuation Batts, add paragraph D. to read as follows: "Walls having sound attenuation batts shall typically have a minimum of STC 45 with STC 60 from Restroom 258 and Men's and Women's toilets to adjacent spaces."

2.4 SECTION 07 51 15 – MODIFICATION TO EXISTING ROOF
1.06 WARRANTY, paragraph A. Add the following to read as follows: "1. Siplast guarantee #34430 expires December 20, 2027. 2. Contractor to contact Siplast DFW area technician at (469)-995-2200." Remove paragraph B. in its entirety.

2.5 SECTION 08 71 00 DOOR HARDWARE
a. 3.01 INSTALLATION add paragraph G. to read as follows: "Contractor to provide lock cylinders, but owner to be responsible for obtaining a locksmith to install the cylinders.
b. 3.04 SCHEDULES, Replace Set 7.0 with attached Set 7.0; replace Set 9.0 with attached Set 9.0.

2.6 SECTION 09 21 16 GYPSUM BOARD ASSEMBLIES
Replace Section 09 21 16 in its entirety with attached Section 09 21 16.

2.7 SECTION 09 68 13 TILE CARPETING
1.03.A. Replace paragraphs #1 and #2 in its entirety to read as follows: "1. Submittal – Please submit duplicate samples approximately 12" x 36"."

2.8 SECTION 09 72 00 DRY ERASE WALL COVERINGS
2.03 Remove the word "Tray" from the paragraph name. Remove paragraph A. Aluminum Tray in its entirety and change letter B. to letter A.

2.9 SECTION 09 73 00 FITNESS ROOM FLOORING
1.07 Warranty Replace paragraph A. in its entirety to read as follows: "Two (2) year warranty to be effective as of Substantial Completion date."

2.10 SECTION 10 22 13 WIRE MESH SECURITY PARTITIONS
Replace Section 10 22 13 in its entirety with attached Section 10 22 13.

2.11 SECTION 11 31 00 RESIDENTIAL APPLIANCES
Replace Section 11 31 00 in its entirety with attached Section 11 31 00.

2.11 SECTION 27 45 00 EXTENSION OF EXISTING ACCESS CONTROL SYSTEM
Insert attached Section 27 45 00 in its entirety into the Project Manual.

ARCHITECTURAL DRAWINGS

2.12 SHEET 2.1 – SECOND FLOOR PLAN & STORAGE 332B
Replace sheet 2.1 dated 03-04-21 in its entirety with attached revised sheet 2.1 dated 07-29-21.
a. Revision to FLOOR PLAN NOTES BY NUMBER A4, A15 and A28.
b. Addition of NOTES BY NUMBER A29 and A30.
c. Revision to Drawing 1 showing change to wall type tags and addition of NOTE BY NUMBER A29.
d. Change to door hardware at Door 258.

2.13 SHEET 2.2 – THIRD FLOOR PLAN
Replace sheet 2.2 dated 03-04-21 in its entirety with attached revised sheet 2.2 dated 07-29-21.
a. Revision to drawing 1, BREAK ROOM 304, changing tag at millwork to read TA1G.
b. Revision to drawing 1, Men's 300 and WOMENS'S 301, change to wall partitions, addition of NOTE BY NUMBER A29, and change to door hardware sets for Doors 300, 301, 300B & 301B.
c. Revision to drawing 1, new partition at CORRIDOR 314, addition of NOTE BY NUMBER A30.

2.14 SHEET 2.4 – SECOND FLOOR DEMOLITION PLAN
Replace sheet 2.4 dated 03-04-21 in its entirety with revised sheet 2.4 dated 07-29-21.
a. Revision to DEMOLITION FLOOR PLAN NOTES BY NUMBER D18.
b. Revision to Drawing 1, addition of NOTE BY NUMBER D15.

2.15 SHEET 2.5 – THIRD FLOOR DEMOLITION PLAN
Replace sheet 2.5 dated 03-04-21 in its entirety with revised sheet 2.5 dated 07-29-21.
a. Revision to Drawing 1, addition of NOTE BY NUMBER D18 and D6.

2.16 SHEET 2.9 – ROOF PLAN
Replace sheet 2.9 dated 03-04-21 in its entirety with revised sheet 2.9 dated 07-29-21.
a. Revision to Drawing 1 showing NOTE BY NUMBER B2 at VTR.

2.17 SHEET 3.1 – DOOR SCHEDULES, DOOR TYPES, & FRAME TYPES
Replace sheet 3.1 dated 03-04-21 in its entirety with revised sheet 3.1 dated 07-29-21.
a. Addition of drawing 5 ACS CONTROLLED SINGLE LEAF DOOR.
b. Revision to DOOR SCHEDULE REMARK NOTES

2.18 SHEET 4.1 – STANDARD PARTITION TYPES (METAL STUDS)
Replace sheet 4.1 dated 03-04-21 in its entirety with revised sheet 4.1 dated 07-29-21.
a. Additions of PARTITION TYPES A3S, A4S, and A5S.
b. Addition of Drawing 3 RSIC-1 WALL SYSTEM FRAMING DETAIL.

2.19 SHEET 4.10 – INTERIOR ELEVATIONS
Replace sheet 4.10 dated 03-04-21 in its entirety with revised sheet 4.10 dated 07-29-21.
a. Revisions to Drawings 2, 5, 7, 8, 9, 10, 13, 15, 16 and 17.

2.20 SHEET 4.11 – FINISH PLAN-SECOND FLOOR
Replace sheet 4.11 dated 03-04-21 in its entirety with revised sheet 4.11 dated 07-29-21.
a. Revision to Drawing 1 RESTROOM 258 FINISH TAG.
b. Revision to FINISH AND MATERIAL LEGEND.

2.21 SHEET 4.12 – FINISH PLAN-THIRD FLOOR
Replace sheet 4.12 dated 03-04-21 in its entirety with revised sheet 4.12 dated 07-29-21.
a. Revisions to drawing 1 FINISH TAGS.

2.22 SHEET 4.13 – ENLARGED PLAN/ACCESSORIES/MTG. HEIGHTS
Replace sheet 4.13 dated 03-04-21 in its entirety with revised sheet 4.13 dated 07-29-21.
a. Revision to detail AUDIO/VISUAL WALL DETAIL @ TYPICAL MONITORS
b. Revisions to TOILET ACCESSORIES SCHEDULE

2.23 SHEET 5.0 – REFLECTED CEILING PLAN-SECOND FLOOR
Replace sheet 5.0 dated 03-04-21 in its entirety with revised sheet 5.0 dated 07-29-21.
a. Revision to RCP PLAN NOTES BY NUMBER R2.

2.24 SHEET 9.0 - FIXTURE & EQUIP. PLAN-SECOND FLOOR
Replace sheet 9.0 dated 03-04-21 in its entirety with revised sheet 9.0 dated 07-29-21.
a. Revision to Drawing 3 showing trim on Writing Surface.
b. Revision to FURNITURE, FIXTURES & EQUIPMENT.

2.25 SHEET 9.1 – FURN., FIXTURE & EQUIP. PLAN-TIRD FLOOR
Replace sheet 9.1 dated 03-04-21 in its entirety with revised sheet 9.1 dated 07-29-21.
a. Revision to Drawing 1 showing changes in Equipment number at COFFEE 325.

ELECTRICAL DRAWINGS

2.26 SHEET E1.1 – SECOND FLOOR PLAN-DEMOLITION LIGHTING
Replace sheet E1.1 dated 03-04-21 in its entirety with revised sheet E1.1 dated 07-29-21.
a. Revision to Drawing 1 showing relocation of existing light.
b. Revision to NOTES BY SYMBOL #5.

2.27 SHEET E1.2 – THIRD FLOOR PLAN-DEMOLITION LIGHTING
Replace sheet E1.2 dated 03-04-21 in its entirety with revised sheet E1.2 dated 07-29-21.
a. Revision to Drawing 1 showing relocation of existing lights.
b. Revision to NOTES BY SYMBOL #4.

2.28 SHEET E2.1 – SECOND FLOOR PLAN-POWER
Replace sheet E2.1 dated 03-04-21 in its entirety with revised sheet E2.1 dated 07-29-21.
a. Revision to Drawing 1 showing revision of power label at CONFERENCE 240.

2.29 SHEET E2.2 – THIRD FLOOR PLAN-POWER
Replace sheet E2.2 dated 03-04-21 in its entirety with revised sheet E2.2 dated 07-29-21.
a. Revision to NOTES BY NUMBER #6 and #10.
b. Revision to Drawing 1, relocation of new fan switch in CONFERENCE 320.

SUBSTITUTIONS

2.30 VISUAL DISPLAY SURFACES
Substitution approved-Make submittals in accordance with Project Manual requirements.

2.31 TOILET COMPARTMENTS
Substitution rejected- Use specified material.

2.32 TOILET, BATH, AND LAUNDRY ACCESSORIES
Substitution approved-Make submittals in accordance with Project Manual requirements.

2.33 METAL LOCKERS
Substitution rejected- Use specified material.

NUMBER OF ATTACHMENTS – TWENTY-SEVEN (27):

Attachment No. 1	SECTION 08 71 00 DOOR HARDWARE SETS 7.0 & 9.0
Attachment No. 2	SECTION 09 21 16 GYPSUM BOARD ASSEMBLIES
Attachment No. 3	SECTION 10 22 13 WIRE MESH SECURITY PARTITIONS
Attachment No. 4	SECTION 11 31 00 RESIDENTIAL APPLIANCES
Attachment No. 5	SECTION 27 45 00 EXTENSION OF EXISTING ACCESS CONTROL SYSTEM
Attachment No. 6	SHEET 2.1 SECOND FLOOR PLAN & STORAGE 332B

Attachment No. 7	SHEET 2.2 THIRD FLOOR PLAN
Attachment No. 8	SHEET 2.4 SECOND FLOOR DEMOLITION PLAN
Attachment No. 9	SHEET 2.5 THIRD FLOOR DEMOLITION PLAN
Attachment No. 10	SHEET 2.9 ROOF PLAN
Attachment No. 11	SHEET 3.1 DOOR SCHEDULE, DOOR TYPES & FRAME TYPES
Attachment No. 12	SHEET 4.1 STANDARD PARTITION TYPES (METAL STUDS)
Attachment No. 13	SHEET 4.10 INTERIOR ELEVATIONS
Attachment No. 14	SHEET 4.11 FINISH PLAN-SECOND FLOOR
Attachment No. 15	SHEET 4.12 FINISH PLAN-THIRD FLOOR
Attachment No. 16	SHEET 4.13 ENLARGED PLAN/ACCESSORIES/MTG. HEIGHTS
Attachment No. 17	SHEET 5.0 REFLECTED CEILING PLAN-SECOND FLOOR
Attachment No. 18	SHEET 9.0 FURN., FIXTURE & EQUIP. PLAN-SECOND FLOOR
Attachment No. 19	SHEET 9.1 FURN., FIXTURE & EQUIP. PLAN
Attachment No. 20	SHEET E1.1 SECOND FLOOR PLAN-DEMOLITION LIGHTING
Attachment No. 21	SHEET E1.2 TIRD FLOOR PLAN-DEMOLITION LIGHTING
Attachment No. 22	SHEET E2.1 SECOND FLOOR PLAN-POWER
Attachment No. 23	SHEET E2.2 THIRD FLOOR PLAN-POWER
Attachment No. 24	SUBSTITUTION- VISUAL DISPLAY SURFACES
Attachment No. 25	SUBSTITUTION- TOILET COMPARTMENTS
Attachment No. 26	SUBSTITUTION- TOILET, BATH, AND LAUNDRY ACCESSORIES
Attachment No. 27	SUBSTITUTION- METAL LOCKERS

— END OF ADDENDUM NO. 3 —

TARRANT COUNTY
SUBCOURTHOUSE IN ARLINGTON
FINISH-OUT AND RENOVATION

SECTION 08 71 00
DOOR HARDWARE
(ADDENDUM #3 7-29-21)

Set: 7.0

Doors: 258

Description: INTERIOR SGL PRIVACY

3	*Hinge*	*TA2714 4-1/2" x 4-1/2" TXS-Steel*	*US26D*	*MK*	*087100*
1	*Privacy Set*	*ML2030 LSA M04*	*630*	*RU*	*087100*
1	*Surface Closer*	*7570 SN-134 (Reg or PA)*	*689*	*NO*	*087100*
1	*Wall Stop*	*409*	*US32D*	*RO*	*087100*
1	*Acoustic Seal Set*	*PEMKOSTCSET-1A 36" 84"*	*BL*	*PE*	*087100*

Set: 9.0

Doors: 300, 301

Description: INTERIOR PUSH/PULL

3	*Hinge*	*TA2714 4-1/2" x 4-1/2" TXS-Steel*	*US26D*	*MK*	*087100*
1	*Foot Pull*	*FP1230*	*US32D*	*RO*	
1	*Push Plate*	*70E*	*US32D*	*RO*	*087100*
1	*Door Pull*	*111A*	*US32D*	*RO*	*087100*
1	*Surface Closer*	*7570 SN-134 (Reg or PA)*	*689*	*NO*	*087100*
1	*Mop Plate*	*K1050 6" x 1" ldw TORX*	*US32D*	*RO*	*087100*
1	*Kick Plate*	*K1050 10" X 2" ldw TORX*	*US32D*	*RO*	*087100*
1	*Wall Stop*	*409*	*US32D*	*RO*	*087100*
1	*Acoustic Seal Set*	*PEMKOSTCSET-1A 36" 84"*	*BL*	*PE*	*087100*

TARRANT COUNTY
SUBCOURTHOUSE IN ARLINGTON
FINISH-OUT AND RENOVATION

SECTION 09 21 16
GYPSUM BOARD ASSEMBLIES
(ADDENDUM #3 7-29-21)

PART 1 – GENERAL

1.01 RELATED DOCUMENTS

A. Drawings and General Provisions of Contract, including General and Supplementary Conditions and other Division 01 of specification sections apply to this section.

1.02 SECTION INCLUDES

A. Metal stud wall framing. metal channel ceiling framing, exterior sheathing, gypsum board with taped and sanded joint treatment and texture surfacing.

B. Related Sections:

1. Section 06 10 00 - Rough Carpentry
2. Section 07 09 00 – Firestopping
3. Section 07 90 00 – Joint Sealers
4. Section 09 90 00 – Painting and Coating

1.03 SUBMITTALS

A. Manufacturer's Data for each product.

B. Texture Samples: Maximum of four (4) different textures on 12" x 12" gypsum board for selection by Architect.

C. Submit layout of gypsum board wall control joints for Architect’s approval.

1.04 QUALITY ASSURANCE

A. Perform work in accordance with GA 216-2015 Application and Finishing of Gypsum Panel Products.

B. Construct fire-rated partitions, ceilings, column furrings, etc. in accordance with applicable U.L. Design or other test acceptable to Authorities Having Jurisdiction.

1.05 PRODUCT HANDLING

A. Keep material dry, protected from weather and direct sunlight exposure.

B. Stack flat and prevent sagging or damage to ends, edges and surfaces.

C. Fully identify manufacturer’s name, brand, type and grade.

PART 2 – PRODUCTS

2.01 GYPSUM BOARD SYSTEM

A. Manufacturers:
1. National Gypsum Co., Type Fireshield
2. United State Gypsum Co., Type Fire code

3. Georgia Pacific Corp., Type Firestop

B. Interior Wall Studs: 2-1/2" and 3-5/8" C-shaped with serrated faces. Gauge to be per SSMA (Steel Stud Manufacturers Association), Limiting Wall Height Table – Non-Composite, conforming to 5 psf, L/240 for appropriate lengths. Sizes as indicated on the drawings.

C. Interior Wall Track

1. 20-Gauge (min. uncoated thickness, 0.0312")
2. Bottom Track to be minimum 1-1/4" leg unless noted otherwise
3. Bottom Track to be 4" leg at Corridors.
4. Slotted Top Track: Sliptrack System, SLP-TRK, 16-Gauge, 2 ½" down-standing legs with ¼" wide by 1 ½" high slots spaced at 1" on centers.

D. SOUND ISOLATION

1. Manufacturer: PAC International, Inc., 7340 Smoke Ranch Road, Suite "A", Las Vegas, NV 89128-0261. Toll Free (866) RSIC-100 (866) 774-2100. Phone (503) 649-7700. Fax (503) 649-2710. Web Site www.pac-intl.com. E-Mail info@pac-intl.com. Master Distributor Acoustical Surfaces, Inc. 800-448-0121
2. Sound Isolation Clips: Resilient Sound Isolation Clip (RSIC-1).
3. Rubber Isolator:
a. Natural organic rubber compound, blended with fire-inhibiting compounds.
b. Molded to isolate ferrule from clip.
c. Minimum of 12 micro-vibration controlling pedestals at point of contact with framing member.
d. Manufactured to ASTM D 2000, M2 AA 510 A13, which includes:
1) Hardness, ASTM D 2240, Shore A: 47.
2) Modulus 300 Percent, ASTM D 412, Die C: 5.3 MPa.
3) Tensile Strength, ASTM D 412, Die C: 11.2 MPa.
4) Elongation at Break, ASTM D 573: 454 percent.
4.. Clip: Galvanized or aluminum-zinc coated steel, 16 gauge.
5.. Ferrule: Zinc-electroplated steel.
6.. Projection: 1-5/8 inches from supporting structure, when 7/8-inch drywall furring channels are used.

E. Furring, Framing, and Accessories:
GA 216, galvanized sheet steel; 20-gauge DWC hat channels 7/8" and C channels 1-1/2".

F. Gypsum Board Types:

1. Standard: 5/8" thick, Type X, maximum permissible length; ends square cut, tapered edges; unless noted otherwise in this Section. Standard Type: ANSI/ASTM C36.
2. Moisture Resistant Type: 5/8" thick, ANSI/ASTM C630, Type X.

G. Fasteners: GA201 and GA216.

2.02 METAL TRIM

A. Fabricate from galvanized steel, not lighter than 0.0217" nominal thickness.

B. Corner Beads: Metal Wallboard Corner Bead 1-1/8" x 1-1/8", ASTM C1047, or approved substitution.

C. Edge Trim: No. 200 Wallboard Casing, or approved substitution.

D. Control Joints: E-Z Strip Expansion Joint, ASTM C1047, or approved substitution.

2.03 ACCESSORIES

A. Joint Materials: GA 216, reinforcing tape, joint compound, adhesive, and water.

B. Sealant: Non-hardening, non-shrinking, for use in conjuction with gypsum board in accordance with Section 07900.

C. Bracing, Furring, Bridging, Plates, Gussets, Clips: Formed steel, thickness determined for conditions encountered; same finish as framing members.

D. Screws: ASTM A90, hot-dip galvanized, self-drilling, self-tapping.

E. Anchorage Devices: Power actuated.

F. Welding: In accordance with AWS D1.1 and AWS D1.3.

G. Primer: Touch-up for galvanized surfaces.

2.04 FINISHES

A. Texture: Confirm building standard or as required by Architect.

B. Studs and Accessories: Galvanize to G60 coating class.

PART 3 – EXECUTION

3.01 INSTALLATION - METAL STUDS

A. Partition Heights:

1. General: Partitions shall be 6" greater than height of ceiling unless noted otherwise.
2. Full Height: Partitions shall extend to deck above at all rated walls, walls scheduled for sound attenuation batts, corridors, party walls between apartments, and walls for rooms with no ceiling (open to deck above), and elsewhere as indicated on the Drawings.
3. Install additional bracing to structure for partitions not extending to deck above ceilings at 4'-0" o.c. maximum, alternating sides; or as per manufacturer's written instructions.

B. Install studding in accordance with GA 216.

C. Space metal studs at 16" o.c.

D. Align floor and ceiling tracks; locate to wall layout. Secure in place with fasteners at maximum 16" o.c. Coordinate installation of sealant with floor and ceiling tracks.

F. Slotted Top Track: Install slotted tracks in strict accordance with Manufactures instructions
1. Secure studs to slotted top track with #8 wafer-head screws.
2. Maintain minimum deflection gap of 0.65 inch between top of stud and top of slotted track.
3. Limit vertical movement to 1”, plus or minus ½”.

F. Space studs not more than 2" from abutting walls and at each side of openings. Connect studs to tracks using fastener or welding method on both side at top and bottom.

G. Construct corners using minimum three (3) studs. Double stud wall openings, door and window jambs.

H. Erect load bearing studs one (1) piece full length. Splicing of studs is not permitted.

I. Allow for deflection, directly below horizontal building framing for non-load bearing framing.

J. Attach cross studs to studs for attachment of fixtures anchored to walls and for attachment of mechanical and electrical items within walls.

3.02 INSTALLATION - WALL FURRING

A. Erect wall furring channels for direct attachment to concrete, brick or CMU. or aluminum curtain wall I-beams Erect horizontally. Secure to alternate channel flanges.

B. Space furring channels maximum 16" o.c., not more than 2" from floor and ceiling lines.

3.03 INSTALLATION - CEILING

A. Install in accordance with GA 216.

B. Coordinate location of hangers with other work. Install ceiling framing independent of walls, columns, and above ceiling work.

C. Reinforce openings in ceiling suspension system which interrupt main carrying channels or furring channels, with lateral channel bracing.

D. Laterally brace entire suspension system.

3.04 INSTALLATION - GYPSUM BOARD

A. Install gypsum board in accordance with GA-216 and GA-600 and manufacturer’s instructions.

B. Fasten gypsum board to furring or framing with nails or screws. Staples may only be used when securing the first layer of double layer applications.

C. Place control joints not to exceed 30’-0” o.c., consistent with lines of building spaces as directed by Architect if slab on grade then vertical control joint shall be placed from top corners of doors and windows to above ceiling, and from bottom corners of windows to floor.

D. Place corner beads at external corners. Use longest practical length. Place edge trim where gypsum board abuts dissimilar materials.

E. Seal cut edges and holes in moisture-resistant gypsum board with sealant.

F. Hold bottom of gypsum panels exactly 3/8” above concrete floor. This will provide the wall base material the best substrate without the gypsum panels touching the concrete floor and allowing potential wicking from water that might get on the floor.

G. Place corner beads at external corners. Use longest practical length. Place edge trim where gypsum board abuts dissimilar materials.

H. Use moisture-resistant gypsum board as back-up where ceramic tile or glazed paint is shown or scheduled on the Drawings, except where cement board is specified.

I. Finish horizontal and vertical surfaces of fire-rated gypsum board enclosures as required to meet fire rating.

J. Use Multi-Purpose Cement Board in showers and shower rooms on walls and ceilings.

3.05 JOINT TREATMENT

A. Tape, fill, and sand exposed joints, edges, and corners to produce smooth surface ready to receive finishes.

B. Feather coats onto adjoining surfaces so that camber is maximum 1/32".

C. Filling, and sanding only is required at surfaces behind adhesive applied ceramic tile.

D. Prepare bottom of walls to provide smooth flat surface at juncture with floor to receive base.

3.06 TEXTURE SURFACING

A. All exposed gypsum board surfaces to receive texture.

— END OF SECTION —

TARRANT COUNTY
SUBCOURTHOUSE IN ARLINGTON
FINISH-OUT AND RENOVATION

SECTION 10 22 13
WIRE MESH SECURITY PARTITION
(ADDENDUM #3 7-29-21)

PART 1 – GENERAL

1.01 RELATED DOCUMENTS

A. Drawings and general provisions of Contract, including General and Supplementary Conditions and Division 1 Specification Sections, apply to this Section.

1.02 SECTION INCLUDES

A. Wire Mesh Security Partition: including but not limited to Wall & Ceiling panels, *and posts*.

1.03 SUBMITTALS

A. Product Data: Submit manufacturer's product literature and installation instructions for each Type of wire mesh, posts, fasteners and accessory required. Include data substantiating that Products to be furnished comply with requirements of the specifications.

B. Drawings: Includes details of layout and installation including clearances, spacing, and relation to adjacent construction in plan and elevation. Submit drawings showing location, plans elevations sections and details.

C. Samples: submit a minimum of 12" x 12" panel constructed of specified frame members and wire mesh. Show method of finishing members at intersections.

D. Installer Qualifications: Engage an experienced installation supervisor who is an authorized and certified representative of the wire cage manufacturer with not less than 2 years' experience installing systems similar to those required for this project

PART 2 – PRODUCTS

2.01 MANUFACTURES

A. Southwest Solutions Group.
B. WireCrafters
C. Beast Wire

2.01 MATERIALS

A. Panels shall be 10 gauge steel wire crimped and woven in to 2" x 1" opening rectangular mesh, securely welded into a frame of 1 1/4" x 1 1/4" x 1/8" steel angle factory punched with 7/8" x 7/16" slotted holes to accept 3/8" mounting hardware. Panels four to six feet wide shall have one 1/4" x 3/4" flat stiffener, wider panels receive two 1/4" x 3/4" stiffeners. All panels shall be fastened to posts with 3/8" x 3" plated bolts and nuts.

B. Posts shall be made of 2" x 2" x 14-gauge steel tubing. Base plates of 2" x 7" x 1/4" steel flat with two 7/16" round holes for anchoring, shall be welded to each tube. Posts are factory drilled with 1/2" holes to accept hardware for mounting panels.

C. Finish Non-plated parts receive one coat of gray acrylic enamel. Touch up paint included with each shipment.

PART 3 – EXECUTION

3.01 EXAMINATION AND PREPARATION

A. Verify that surfaces are ready to receive work prior to installation of this work.

B. Notify the Architect of any discrepancies in field conditions which effects the installation of the work in this Section before proceeding.

3.02 INSTALLATION

A. Generally, the installation of the wire mesh security partitions shall conform to the accepted practice and the recommendations of the manufacturer of the item involved.

B. Contractor to coordinate opening in cage with Door 332B for proper operation of door.

3.03 ADJUSTING AND CLEANING

A. Check and readjust operating hardware items just before final inspection. Leave work in complete and proper operating condition. Remove and replace defective work including doors and panels that are warped, bowed, or otherwise unacceptable.

B. Touch up painting immediately after erection, clean field welds, bolted connections. Paint exposed areas with same material as used for shop painting to comply with SSPC PA1 for touching up shop painted surfaces.

— END OF SECTION —

TARRANT COUNTY
SUBCOURTHOUSE IN ARLINGTON
FINISH-OUT AND RENOVATION

SECTION 11 31 00
RESIDENTIAL APPLIANCES
(ADDENDUM #3 7-29-21)

PART 1 – GENERAL

1.01 RELATED DOCUMENTS

A. Drawings and General Provisions of Contract, including General and Supplementary Conditions and other Division 01 of specification sections apply to this section.

1.02 SECTION INCLUDES

A. Furnishing and installation of appliances including, but not limited to, the following:

1. Full-size Refrigerators
2. Ice Makers
3. Microwave
4. Undercounter Refrigerator
5. Coffe Maker

1.03 SUBMITTALS

A. Shop Drawings: Indicate appliance locations, dimensions, details of attachments, anchors, etc.

B. Product Data: Provide data on products, specified accessories, characteristics and manufacturer's installation instructions.

1.04 QUALITY ASSURANCE

A. All appliances shall be installed and placed in complete operation by trained, competent personnel.

1.05 WARRANTY

A. All appliances shall be accurately fitted with proper clearances and left in perfect working order. Provide one (1) year full, unlimited warranty on all parts and labor.

PART 2 – PRODUCTS

2.01 FULL-SIZE REFRIGERATOR

A. Manufacturer: General Electric, Full-size, Model G1E21GSHSS, 21.1 cu. ft., LG, Kitchen Aid.

B. Locations: 3rd Floor. Refer to Drawings for exact locations.

2.02 ICE MAKER

A. Manufacturer: Hoshizaki, DCM–270BAH-0S, 288 lbs./per day with 10 lbs. storage. W/ Hoshizaki Stand, SD270, U-Line, GE.

B. Locations: Refer to Drawings for exact locations.

2.03 MICROWAVE OVEN

A. Manufacturer: General Electric, Model PEM31DFBB (black on black), LG, Kitchen Aid.

C. Locations: 3rd Floor.

2.04 UNDERCOUNTER REFRIGERATOR

A. Manufacturer: Frigidair, Undercounter Refrigerator, Model FFPE3322UM, Energy Star, 3.3 cu.ft.

B. Location: 3rd Floor. Lactation Room 304B.

2.05 COFFEE MAKER "A"

A. Manufacturer: Bunn Model 12 cup Automatic Coffee Brewer with one warmer, Stainless, Number 12950.0293.

B. Manufacturer: Bunn Model Small foorprint warmer, WX1, 120, Number 06450.004.

C. Manufacturer: Bunn Model (1) Easy Pour, ORANGE Handle, Number 06101.0101.

D. Manufacturer: Bunn Model (1) Easy Pour, Black Handle, Number 06100.0101.

E. Location: 3rd Floor, Break Room 304.

2.06 COFFEE MAKER "B"

A. Stainless Steel Mr. Coffee 12-Cup Coffeemaker with Rapid Brew System. Model#: 2131131

B. Location: 3rd Floor, Coffee Room 325

PART 3 – EXECUTION

3.01 INSTALLATION

A. Install all items in accordance with manufacturers' printed instruction and approved Shop Drawings.

B. Locate all items accurately.

C. Coordinate with millwork contractor the minimum clearances required for appliance installations in millwork.

— END OF SECTION —

TARRANT COUNTY
SUBCOURTHOUSE IN ARLINGTON
FINISH-OUT AND RENOVATION

SECTION 27 45 00
EXTENSION OF EXISTING ACCESS CONTROL SYSTEM
(ADDENDUM #3 7-29-21)

PART 1 – GENERAL

1.01 SECTION INCLUDES

A. Server Hardware / Software, Application Software, Intrusion detection devices, Security access devices, Access Control, Relay Control, and Alarm Monitoring controllers.

1.02 PROJECT SCOPE

A. Provide all necessary hardware and components required to control doors in the Tarrant County Southeast Sub-Courthouse, Arlington, Texas. The doors will be controlled by way of new access control system panels connected to the existing Software House CCURE host computer in the Tarrant County Justice Center. *Provide and install (1) one new control system panel to support (8) eight card readers.*

1.03 WORK INCLUDES

A. Coordination, provision, installation, inspection, testing, instruction and warranties of an Access Control System. Provide plant, materials, equipment, transport and labor necessary to accomplish this and have a complete, programmed and proper operational system.

B. Also includes:

1. Required licenses and permits including payment of charges and fees.
2. Verification of dimensions and conditions at the job site.
3. Provision of submittals.
4. Installation in accordance with the contract document, manufacturer's recommendation, coordinated School District operational procedures and in conformity with applicable codes and authority having jurisdiction.

1.04 RELATED WORK

A. Division 16: Electrical Work.

B. Conduit, wire ways, floor boxes, wall boxes, pull boxes, junction boxes, and AC power circuits and ground wiring to the System are specified under the electrical specifications. This does not relieve this Installer from responsibility for a complete working system. Coordination with the Electrical Contractor is required to achieve proper conduit and power systems.

1. Supply accessories, software and minor equipment items needed for a complete system, even if not specifically mentioned in these Specifications or on the associated Drawings, without claim for additional payment.
2. Not withstanding any detailed information in the Contract Documents, it is the responsibility of the Installer to supply systems in full working order. Notify the Architect of any discrepancies in part numbers or quantities before bid. Failing to provide such notification requires this Installer to supply items and quantities according to the intent of the Specifications and associated Drawings without claim for additional payment.
3. Coordination with Fire Alarm System is required to maintain egress paths.

C. Doors, Frames and Hardware:

1. Special emphasis must be placed on coordination with the door hardware, framing and placement of devices.

1.05 REFERENCES

A. NFPA 70 – National Electrical Code

B. UL294 – Standard for Access Control Systems

C. NFPA 72 – National Fire Alarm Code

D. NFPA 101 – Life Safety Code

E. National Electrical Manufacturer's Association (NEMA).

F. National Electrical Code (NEC).

G. American National Safety Institute (ANSI).

H. Underwriters Laboratories (UL).

I. American Society of Testing and Materials (ASTM).

J. Building Industry Consulting Service International (BICSI).

K. BICSI's Telecommunications Distribution Methods Manual (TDMM).

L. Structured Cabling Standards (TIA/EIA).

1.06 REGULATORY REQUIREMENTS

A. System shall be UL-Listed.

1.07 EXISTING SYSTEM DESCRIPTION

A. The existing system operates on Sensormatic CCURE 9000 V .2.7 software platform.

1.08 SYSTEM DESCRIPTION

A. The system shall provide supervised alarm point monitoring. Upon recognition of an alarm, the system shall be capable of displaying alarm information in text format, on a graphic floor plan, initiate alarm recording on a DVR, and switching CCTV cameras that are associated with the alarm point. The system shall be capable of arming or disarming points both manually and automatically, by time of day, and day of week.

B. The method of communication from remote locations to the central components shall be transparent to the user.

C. After installation, the OWNER shall be able to perform hardware configuration changes as desired without the services of the MANUFACTURER.

D. Equipment repair shall be able to be accomplished on site, by module replacement, utilizing spare components.

E. All controller components shall utilize “Distributed-Processing” concepts. The distributed processing shall include the ability to down-load operating parameters to any field panel, thus allowing the field panel to provide full operating functions independent of any other system component.

F. The system shall be capable of utilizing the existing LAN / WAN connections in the building.

1.09 ACCESS CONTROL DESCRIPTION

A. The Surveillance and Duress Systems which may existing within the building will be required to work in unison with the Access Control and will be used to monitor selected interior and exterior areas.

B. Update a Central Computer software-based control system to manage database, control and communicate with local area controllers.

C. Provide local area controllers, Data Managers (“DM”) located within the nearest assigned electronic system or telecommunication equipment room to communicate with the card readers, monitor doors and other devices as shown on the Drawings.

D. The DM’s are to communicate to a central computer system, if in place, for distributed database operation by means of an Ethernet local area network.

1. This connection is to be coordinated with the building local area network.

E. Provide Proximity Card Readers, request to exit motion detectors, and monitor switches as indicated on plans. Provide remote control of these doors via network computers which have been assigned

1. Coordinate with architectural details for mounting of devices.

F. Each DM will be required to operate as an independent system and is not to be dependent on a host computer. In the event of a failure in the Ethernet system, each DM will continue to operate as programmed prior to the outage. Operation in a degraded mode is non-compliant. Once the Ethernet has been restored each DM will be updated and reports generated.

G. In the event of a trouble or breach condition on the system, a warning will be generated to assigned administrative computer and monitor locations as indicated on the plans and as described in these specifications.

H. Provide a low-voltage Power Supply located within each room housing equipment for the Card Readers and DM’s.

1. Power supplies must be contained within enclosures. Wall mounted receptacle plug-in transformer type power supplies are not acceptable.

I. Provide a low-voltage Power Supply located within each of the rooms having any ancillary relays required to interface with electric strikes, request to exit devices or door openers. Provide power supply with individual fuse for output.

1. This power supply is in addition to power supplies provided by the hardware provider for local strikes or latch controls.

1.10 MONITORING SYSTEM DESCRIPTION

A. Monitor interior doors via door position switches specified herein and indicated on the contract Drawings.

B. When multiple doors are indicated, provide each door leaf with a monitoring switch.

C. If door frames are unable to be drilled or punched for switches and cable, coordinate the installation of surface mounted switches and connections. All cable is to be protected via armored cable and or conduit.

1. All new door frames are to receive recessed switches. No surface mounted switches are to be provided unless coordinated with the architect. If surface switches are provided, all connections must be concealed with protective covers.

D. Multiple leaf doors and banks of doors, as shown on the drawings, are interconnected and reported as a single annunciation point when wired in conjunction with a card reader. If no card reader is present the doors are to be wired to a common accessible junction box for service and then each door independently wired to the DM. At the DM via software doors may be combined in zones for signal management.

1. The system must be configured by Zones such as by area, floor, by device type, etc.

E. Card reader locations associated to doors or gates must be interconnected to the door electrified hardware provided as part of the hardware package. Door monitor switches provided in this section of work must also be incorporated into the operational procedures coordinated with the County.

1. Request to Exit (RTE) motion detectors are to be provided and interconnected under this specification Section.

F. Field devices are to be cabled back to the DM locations independently.

1. Example:
   a. Request to exit, door switches, local alarms to contacts, card readers, etc.

2. QUALITY ASSURANCE

A. Contractor’s Qualifications: Firm experienced in the provision of systems similar in complexity to those required for this project; and meet the following:

1. Experience with equipment and systems of the specified types.
2. Experience with at least three comparable scale projects within the last two years.
3. Be a franchised dealer and service facility for the manufacturer’s products furnished.
   a. Written proof must be provided from the manufacturer indicating that the company is a trained and certified provider with certified technicians. This manufacturer’s proof of conformance must be in effect prior to the two years listed above.
4. Maintain a fully staffed and equipped service facility.
5. Provide and demonstrate to the Architect that prospective integrator has:
   a. Adequate plant and equipment is available to complete the work.
   b. Adequate staff with commensurate technical experience is available.

B. Manufacturer’s Qualifications: Experience in the production of specified types of product. Production per applicable NEMA standards.

C. Work: Perform Work in compliance with the applicable standards listed herein and governing codes and regulations of the authorities having jurisdiction and the Contract Documents.

1. Drawings and specification requirements govern where they exceed Code and Regulation requirements.
2. Where requirements between governing Codes and Regulations vary, the more restrictive provision applies.
3. Nothing in the Contract Documents grants authority or permission to disregard or violate any legal requirements.

D. Coordinate exact location and installation of equipment, power, grounding, and raceway requirements with the Architect.

E. The Facility currently utilizes CCURE as their vendor for Access Control.

1.12 SUBMITTALS

1. Manufacturer's Data:
   a. Submit one (1) digital copy of:
      i. Product Data Sheets.
      ii. Installation Instructions.
   b. Authorized Dealer Certificate and Certified Training Certificates of installers who will be working on this project.

2. Shop Drawings
   a. Submit one (1) digital copy of shop drawings, including:
      i. Layout of equipment on supplied AutoCAD drawings.
      ii. Field Controller equipment location wall layouts, including size requirements.
      iii. Detailed wiring diagrams of Field Controllers, Door Details, and head-end devices.
      iv. Load calculations of all security equipment for proper sizing of electrical provided by the customer and standby emergency generator circuits.

3. As-Built Drawings
   a. Update Shop Drawings to create final As-Built Drawings. Submit 1 digital copy in current AutoCAD format on a CD (1 copy).

1.13 OPERATION AND MAINTENANCE MANUALS

A. Operation Data: Include three (3) copies of the Operator Manuals.

B. Maintenance Data: Include maintenance and repair procedures.

1.14 WARRANTY AND SERVICE AGREEMENT

A. All equipment, materials, and labor shall be guaranteed for a period of 12 months from the date of *substantial completion*.

B. Provide any software maintenance updates or upgrades at no additional cost to the Owner for this period.

C. Perform two (2) scheduled preventative maintenance site visits per year during the warranty period.

D. Response Times – Normal business hours shall be 7 AM to 5 PM Monday through Friday. Calls for service before noon shall be responded to on-site before the end of the day. Calls after noon shall be responded to on-site by noon the following business day.

E. Provide extra costs for time outside of normal business hours if the Owner requires emergency service.

F. Submit normal and after-hours labor costs and typical costs for equipment for items not covered under the Warranty.

PART 2 – PRODUCTS

2.01 MANUFACTURERS

A. Security Management Control System Software.

1. Software House C•CURE 9000 System.

B. Security Management Control System Field Hardware.

1. Software House apC/8X and iSTAR controllers.

2.02 BASIC CENTRAL SYSTEM COMPONENTS

A. Central Processing Unit Computer Specifications.

1. Utilize the existing server in the Tarrant County Justice Center.

B. Control Panel Specifications

1. The control panel shall incorporate microprocessor-based, digital technology, using high speed processing for maximum reliability.

C. Distributed Intelligence

1. The system shall use distributed intelligence architecture, with controllers operating independently of one another.

D. Stand Alone Operation

1. All database information required for stand-alone operation shall be stored at the control panel level. All decision-making shall be performed at the control panel, eliminating the need for degraded mode operation.
2. Proprietary software programs and control logic information used to coordinate, and drive system hardware shall be stored in Flash Downloadable Read Only Memory.

2.03 SYSTEM CONFIGURATION

A. Host Computer to Controller Communication Protocols

1. The system shall utilize TCP/IP for communicating over dedicated or shared Ethernet networks.
2. All of the communications protocols shall be supported simultaneously on the system.

B. Host Computer to Controller Communication Transmission Methods/Hardware

1. Communications between the computer and the controller shall be able to use any or all of the following methods:
   a. Hardwired.
   b. Fiber Optic.
   c. Ethernet 10/100/1000.

2.04 MAXIMUM SYSTEM WIDE CAPACITIES

A. The following shall be the maximum system wide capacities. The actual number shall be dependent upon the mix of controllers that make up the system.

1. Doors: Unlimited
2. Supervised Alarm Inputs: Unlimited
3. Control Relays: Unlimited
4. Controllers: Unlimited
5. Users: Unlimited

2.05 SOFTWARE CONFIGURATION

A. Update existing Graphical User Interface (“GUI”) for development with the Access Control System.

B. Development of Graphical User Interface (GUI) and software control:

1. Control and configuration for all systems must offer integration of components and operation into a complete system. It will be the responsibility of the integrator to provide and program all software of individual components into one integrated and operational system.

2.06 EXISTING SYSTEM SOFTWARE

A. Software Capacities – System software and language development software shall be existing, industry accepted, and of a type widely used in commercial systems. Operating system shall be multi-user/ multi-tasking capable of operating in a nonproprietary CPU. The application software, substantially as offered, shall be written in a high level, industry standard programming language. The system shall be modular in nature, allowing the system capacities to be easily expanded without requiring major changes to the system operation and maintaining all defined system data as well as historical information.

B. All System functions shall be accessible via point and click mouse control. Systems requiring command string control or complex syntax are not acceptable.

1. The system software shall include the following features and be configured for minimum:

   a. Thirty-two (32) readers.
   b. Ten thousand (10,000) active card holder records.
   c. Sixty-four (64) simultaneous programming locations.
   d. Nine hundred-ninety-nine (999) client PC’s definable on Server supporting up to seventeen (17) simultaneous printers.
   e. One hundred twenty-eight (128) time schedules.
   f. Two hundred and fifty-six (256) programmable holidays for apC/8X and unlimited for iSTAR.
   g. One hundred twenty-eight (128) input points.
   h. One hundred twenty-eight (128) output control points.
   i. 128 total configurable card formats for the entire system.

j. Forty thousand (40,000) operator accounts with unlimited definable privilege levels.
k. Audible alarm annunciation at Operator workstation.
l. Unlimited graphic maps to be displayed on the Operator workstation monitor.
m. Multi-user, multi-tasking operating system.
n. Dial up remote diagnostics.
o. Event scheduling.
p. An unlimited number of user defined card holder data fields.
q. An unlimited number of door groups.
r. An unlimited number of areas.
s. Card holder access privilege activation date and time.
t. Card holder access privilege expiration date and time.
u. Clearance activation date and time.
v. Clearance expiration date and time.
w. Americans with Disabilities Act (ADA) compliance in door and access operation.
x. Serial interface with CCTV matrix switchers.
y. Field panel communications through various means including hardwired, dial-up and Ethernet network.

2.07 HARDWARE REQUIREMENTS

A. Controllers – The iSTAR™ Pro Intelligent Network Controller (INC) is an independent, modular controller designed to integrate various event management applications on one controller, providing ease of installation and interoperability among vital applications. The INC shall be an independent and totally self contained, microprocessor-controlled Network Controller used to enhance or control a variety of existing and new systems. The INC serves as the data collection and communications interface between the System Server and the various field devices such as card readers, alarm inputs and control outputs. The iSTAR™ Pro Controller has been designed to provide “PC like” services for use in a variety of applications. These services shall be built on top of the Microsoft Windows CE operating system running on the hardware platform.

B. Controller Board

1. The General Controller Module (GCM) is the core of the Intelligent Network Controller. The GCM consists of three major subsystems, Software services, GCM Hardware and the Access Control Module (ACM).

C. Enclosure

1. The iSTAR shall be housed in a locking 16-gauge steel enclosure, suitable for wall mounting in accordance with UL 294. All cabinet locks shall be keyed alike. The cabinet shall be suitably sized to allow installation of the INC and associated field wiring. The cabinet shall measure 24” in height by 16.5” in width and 4.5” in depth. There shall be a power indicator on the door which shall be visible when power is applied to the INC. A single, Normally Closed (NC) tamper switch shall be incorporated into the door. There shall be 12 knockouts on the enclosure of various sizes to facilitate conduit and wire routing.

D. Internal Power Supply

1. Each iSTAR Pro Intelligent Network Controller shall accept a regulated input voltage of 11.5VDC to 13.8VDC and generate appropriate voltage levels for on-board use as required. The maximum power required shall be calculated based on the number of readers and other auxiliary devices connected to the INC not to exceed 5A at 12VDC. All power outputs to external devices shall be current limited by the INC.

E. Standby Battery

1. The controller shall have an internal standby battery that is capable of running the system during AC power interruptions. It shall be recharged by a charging circuit incorporated into the controller board.

F. Expansion Options

1. The GCM hardware shall be comprised of several components. The current processor in the hardware design shall be the Motorola PowerPC 860. Each GCM contains one Ethernet port, three serial ports, two Type II PC Card slots, and an expansion connector, which can accept up to two Access Control Modules (ACM), and a LCD for diagnostics and program verification.
2. Each ACM module provides sixteen (16) supervised inputs, eight (8) relay outputs and shall support a maximum of (8) readers, eight (8) I8 input modules and eight (8) R8 output modules. The Access Control Module shall support the option of direct or indirect Wiegand reader connections. Wiegand readers directly connected to the ACM may reside up to 500 ft. from the ACM with the proper 18 AWG wiring. Indirect Wiegand readers shall be connected via the RM series reader modules and may reside up to 4000 ft. from the ACM via a properly wired RS-485 bus. Each INC shall support up to eight (8) different card formats. Each card format shall support fifty (50) company and site codes. The card formats shall be assigned to any of the card readers.

G. Power Requirements

1. Each Access Control Module shall accept a regulated input voltage of 11.5VDC to 13.8VDC and generate appropriate voltage levels for on-board use as required. The input supply voltage shall be bussed directly to the reader bus connectors to supply operating voltages for reader and input/output modules. The ACM shall provide a configuration jumper which shall allow either +12VDC or +5VDC to be supplied the external read heads connected via the direct Wiegand ports. All Wiegand readers connected to the Wiegand ports shall have the same power requirements or an external power supply shall be required. All power outputs to external devices shall be power limited via PTCs.

H. LED Indicators

1. Each ACM shall provide LED indicators for the following functions:
   a. Power ON.
   b. Data for the RS-485 communications ports.
   c. On-board relay activation.

I. Connectors

1. All ACM connectors shall be screw down type and pluggable to facilitate field replacements and simplify testing.

J. Reader Ports

1. There shall be eight (8) RS-485 ports provided, per ACM, for connecting external RM series reader modules and input\output modules. An end-of-line (EOL) termination resistor shall be provided for each port to satisfy RS-485 multi-drop requirements. The EOL termination for each RS-485 port may be individually disabled via an eight (8) position DIP switch to allow the ACM (INC) to reside in the middle of an RS-485 reader chain.

K. Direct Wiegand Reader Connections

1. The ACM shall provide for direct connection of Wiegand read heads. The read heads connected to these ports shall conform to the industry standard Wiegand Output format and shall support multiple card technologies including magnetic stripe, Wiegand, proximity, barium ferrite, bar code and biometrics. Any unused direct Wiegand ports may be individually disabled via an eight (8) position DIP switch to allow faster polling for active readers. Any direct Wiegand reader port may be disabled and an RM series reader shall be connected in its place, through the reader bus, to extend the distance from the INC to the read head.
    a. LED Control – In addition to accepting card data from the read heads, the ACM shall control the LED's at the reader, supporting industry standard 2-wire or 1-wire control. The ACM shall also provide a signal line to control an external beeper at the reader with an active low going signal. The LED control shall support three LEDs – red, amber and green. The System Server shall support the configuration of these LEDs such that certain LEDs shall illuminate or not illuminate or pulse to indicate various System status conditions. These LEDs shall indicate the following status conditions as a default:
        1. On-line Indication: Amber LED on steady.
        2. Off-line Indication: Red LED on steady.
        3. Card Accepted: Green LED pulses for door open time.
        4. Card/PIN: Amber LED pulses to enter PIN.
        5. Subsequent red/green: LEDs mimic card input.
        6. Alarm Condition: All LEDs pulse in alternating pattern.
2. Wiegand Keypad Support
    a. The direct Wiegand reader ports shall support Wiegand readers with integrated Wiegand output keypads. The supported data format shall conform to industry standard 4-bit or 8-bit (4 bits plus 4 bits complimented) Wiegand keypad data. Three by four matrix keypads shall be supported through the use of an RM-4K or an RM-4E.

L. Alarm Inputs

1. Sixteen (16) Class A Supervised inputs shall be provided on each ACM. All Supervised inputs in in the system shall require 1000 ohm (1K) EOL terminating resistor networks which may be configured to accept Normally Open (NO) or Normally Closed (NC) switches or contacts. Each EOL resistor network shall be configured such that 1K ohms is secure, 500 or 200 ohms is an alarm condition, and an open or shortened input is a supervision alarm.

2. Each ACM shall support eight (8) I8 Input boards, providing an additional sixty-four (64) supervised inputs to each ACM.

3. The System Software Administrative Application shall support the configuration of all Supervised inputs connected to the ACM. The Monitoring Application Interface shall provide the current status of the inputs and shall log changes in input status. Supervised inputs shall be able to be taken offline for diagnostic purposes and each input shall support being linked directly to an output or to a system event. All input activations shall be reported to the Monitoring Application and stored in the Historical Journal on the System Server.

M. Relay Output

1. Each ACM shall provide eight (8) form C, general-purpose, dry contact relay outputs, which are user configurable. These relay contacts shall be rated 10A at a nominal voltage of 28VDC\24VAC. Each relay contact shall have two (2) metal oxide varistors (MOV's) rated at 56V, between the relay's common terminal and the normally open and normally closed contacts to prolong the contact life and protect the ACM from external devices being controlled by the relay.

2. Each ACM shall support eight (8) R8 Output boards, providing an additional sixty-four (64) outputs to each ACM. These relays shall be rated at 2A resistive and 1A inductive at 30VAC/DC.

3. The System Software Administrative Application shall support the configuration of all outputs connected to the ACM. The Monitoring Application Interface shall provide the current status of each output and shall allow the manual activation of each output individually or in user-defined groups for diagnostic purposes. All output activations shall be reported to the Monitoring Application and stored in the Historical Journal on the System Server.

2.08 CARD READER/KEYPAD SPECIFICATIONS

A. Readers

1. There shall be eight (8) RS-485 ports provided, per ACM, for connecting external RM series reader modules and input\output modules. The INC shall support up to sixteen (16) RM series card readers per panel. The RM series readers shall incorporate read heads that shall support various card technologies including magnetic stripe, Wiegand or proximity. Other read heads, not incorporated into the RM reader, shall require an RM Reader Interface Module. The read heads connected to the RM Reader Interface Module shall conform to the industry standard Wiegand Output format or the ABA Magnetic Stripe format and shall support multiple card technologies including magnetic stripe, Wiegand, proximity, barium ferrite, bar code and biometrics.

2. Reader Interface Module

   a. A reader interface module shall be required for any card reader that is not connected to the direct Wiegand ports. This reader module shall be available as a separate module or integrated into the design of an RM series reader. The reader module shall contain a rotary address switch allowing a unique address setting for each RM series reader module connected to the INC. The reader module shall accept either Wiegand or Clock/Data signals from read heads. A switch shall be available to set the read head signal format.
   b. The reader module shall communicate with the INC utilizing two (2) wire RS485. The reader modules shall be connected to the INC in either a bus or star configuration, whichever is most appropriate for the installation. Reader modules shall not be installed in excess of four thousand (4000) feet from the INC. The four thousand (4000) foot distance limitation may be extended using manufacturer approved fiber optic cabling and transceivers.
   c. The reader module shall operate on 11.5 to 13.8 VDC. Power for the reader module shall be supplied by the INC or local power supply. All data and power wiring shall be in accordance with manufacturer's specification.
   d. The reader module shall include two (2) Class A alarm inputs and open collector logic for driving two (2) auxiliary relay/outputs. The reader module shall include a dedicated input for a tamper signal. The tamper switch shall be installed on those reader modules integrated into the RM series reader design. Physical access to the reader module shall not allow activation of the door locking mechanism.
   e. The reader module shall contain an audible sounder. The sounder shall be able to be activated to provide feedback as keys are depressed on the reader keypad.

f. The INC shall poll each reader module. If after successive poll cycles, a reader module fails to respond to a poll, the INC shall report the Reader as Off-line to the System Server.

g. The RM series reader module shall support three (3) high intensity LEDs – red, amber and green. The System Server shall support the configuration of these LEDs such that certain LEDs shall illuminate or not illuminate or pulse to indicate various System status conditions. These LEDs shall indicate the following status conditions as default:
   1. On-line Indication: Amber LED on steady.
   2. Off-line Indication: Red LED on steady.
   3. Card Accepted: Green LED pulses for door open time.
   4. Card/PIN: Amber LED pulses to enter PIN. Subsequent red/green LEDs mimic card input.
   5. Alarm Condition: All LEDs pulse in alternating pattern.

3. Reader Keypad

   a. The RM series reader module shall support an integrated twelve (12) button keypad with tactile response. The keypad may be used for Personal Identification Number (PIN) entry following presentation of an access card or Card Access via Keypad. Keypads not integrated into the reader shall be mounted within twenty (20) feet of the reader module and shall require an RM-4K or RM-4E.
   b. The reader module with keypad shall support a diagnostic mode, whereby the keypad may be used as a diagnostic tool to check the operation of the reader module.
   c. Three by four matrix keypads, other than those incorporated into the RM series reader housing, shall require the use of an RM-4K or an RM-4E.

4. Wiegand Keypad Support

   a. The reader interface module shall support Wiegand readers with integrated Wiegand output keypads. The supported data format shall conform to industry standard 4-bit or 8-bit (4 bits plus 4 bits complimented) Wiegand keypad data. Three by four matrix keypads, other than those incorporated into the RM series reader housing, shall require the use of an RM-4K or an RM-4E.

5. Standard Magnetic Stripe Reader Features

   a. The magnetic stripe reader incorporated into the RM series reader shall read high and low coercivity encoding. The reader shall be set to read ABA Track 2 encoding. The ability to read standard ABA Track 2 encoding on either Track 1 or Track 3 shall be available as an option. The read head shall be housed in the reader housing with the reader module, or as a mullion mount unit. Mullion mounted readers shall be installed within ten (10) feet of the reader module. The reader shall be able to operate from 0° C to +60° C with an optional thermostatically controlled heater kit. Read head life shall be one million passes.

6. Standard Proximity Reader Features

   a. The INC shall have the capability of supporting a variety of proximity or Wiegand reader configurations depending on the requirements of the particular application. These readers shall provide an Industry Standard Wiegand signal. The proximity read head/antenna shall be available either housed in the RM series reader housing with the reader module or as a mullion mount unit. Read heads/antennas, not housed with the RM series reader module, shall be installed within five hundred (500) feet of

the reader module. The proximity read head integrated into the RM series reader shall be able to operate from 0° C to +60° C with an optional thermostatically controlled heater kit. Cable type, wiring configuration and grounding practices shall follow manufacturer's specifications.

2.09 PROXIMITY CARD READERS

A. The controller shall be capable of using proximity readers that output a standard 26-55 Bit Wiegand data format. The readers can have a short or long read range and be unidirectional or bi-directional.

B. Readers for this project shall be HID ProxPro II 5455BGN00.

2.10 REQUEST-TO-EXIT MOTION DETECTORS

A. The Request-To-Exit motion detector shall be equal to Bosch DS150 I.

B. The Request-To-Exit push button shall be equal to Rutherford 908-TD.

2.11 DOOR POSITION SWITCHES

A. The door position switches shall be equal to Sentrol Door Contact 1078C recessed type.

2.12 ELECTRIC LOCKING HARDWARE

A. Magnetic Locks shall be equal to Rutherford 8310DSS-US28.

B. Magnetic Locks shall be equal to Rutherford 8371LSS-US28.

2.13 POWER DISTRIBUTION UNIT

A. A power distribution unit shall be used to power all electronic access control devices. The unit components shall be in an enclosure separate from the access control panel and shall contain the following features.

1. Individually fused outputs.

2. Fire-Override capabilities for all locking devices as required.

3. Internal power supply.

B. The power distribution shall be equivalent to the Base Electronics LVPC enclosure and shall contain the equivalent of the following components.

1. LVPC-201144-24 8-Door Access Control PDU

   a. Enclosure: LVPC-16x20x06. For use with: any Output: 24VDC

2. Main Components, Kits, Accessories, Remarks

   a. LV-8RS.
   b. (1) LV-8A.
   c. (1) LP5 Power Supply and XF29218 Transformer.
   d. (8) RH1B-U-DC24V Relay.
   e. (1) RH2B-U-DC24V Relay.
   f. (17) 1A Fuses.
   g. (1) battery cable kit, mounting hardware kit.

h. 115VAC Power Box with 15A CB Switch and Duplex Outlet wiring.

2.14 DURESS BUTTON (NOT IN CONTRACT)

2.15 LED ALARM DISPLAY- EXISTING

A. Provide a LED alarm display to visually annunciate an alarm each time a duress button is depressed and latched. Display shall be equipped with two display lines, each with red LEDs, 20 characters per line. Display dimensions shall be 36" L x 4.8" H. Display shall include a real-time clock and integral Ethernet LAN interface card. LED alarm display unit shall be Adaptive Displays Alpha 4120/R series or approved equal.

2.16 AUDIBLE ALARM

A. The system shall include all hardware and software components in order to initiate and sustain an audible alarm when the LED Alarm display is activated. The audible alarm shall only be shut off manually. Hardware may include, but not be limited to, wall-mounted or overhead speakers, wiring, computer, and any and all mounting hardware. Software shall consist of standard or custom written program in order to control the initiation, tone, sound level, etc. of the sound.

B. The system shall include one (1) 4-hour videotaped training session on the set-up of computer software and integration with the LED display board.

PART 3 – EXECUTION

3.01 INSTALLATION

A. Install system in accordance with manufacturer's instructions.

B. Install wiring for detection and signal circuit conductors using cable rated to meet all code requirements and to match the environments conditions of the facility. Use 22 AWG minimum size conductors.

C. Make conduit and wiring connections to existing door hardware devices as required.

D. All cable will be routed perpendicular and parallel to building lines.

E. Cable shall be bundled and clearly marked.

F. Cable shall not be routed within 12-inches of fluorescent light fixture ballasts or electronic noise inducing appliances.

G. Cable in panels shall be neatly bundled and individually labeled with an alphanumerical designation. Wire numbers, related wire location, and terminal position shall be contained in the as-built documentation.

3.02 ACCESS CONTROL / INTRUSTION DETECTION POINT SHEET DEFINITIONS

A. DOOR/POINT

1. This field provides identification of the door or point to be controlled or monitored. For doors or points that are identified in the Point Definition Sheets and Drawings which are not identified on the Architectural plans, coordinate with Owner for exact locations.

B. DESCRIPTION

1. This field provides a description of the door or point to be controlled or monitored.

C. DI (DIGITAL INPUT)

Provide one or more, as appropriate, digital (binary) status/alarm input monitoring points integrated into the Access Control System (ACS) or the Intrusion Detection System (IDS), for the monitoring of the following:

DB: Duress button. (Not In Contract)

DP1: Recessed door position switch.

DP2: Integral door position switch provided with the electromagnetic lock

MS: Motion Sensor**.**

D. DO (DIGITAL OUTPUT)

Provide one or more, as appropriate, digital output control functions from the ACMS:

EML: Electromagnetic lock.

EDL: Electric door latch (panic hardware rim device).

EDS: Electric strike.

E. C/R (CARDREADER)

Provide integrated ACS cardreader control including the associated monitoring and control output facilities:

CR1: Provide wall mounted cardreader.

3.03 REX (REQUEST TO EXIT DEVICE)

A. Provide integrated ESS input monitoring of the following request to exit devices:

PB: Exit pushbutton.

PH1: Electrical panic hardware with electric door latch (furnished by others)

MS: Motion Sensor**.**

— END OF SECTION —

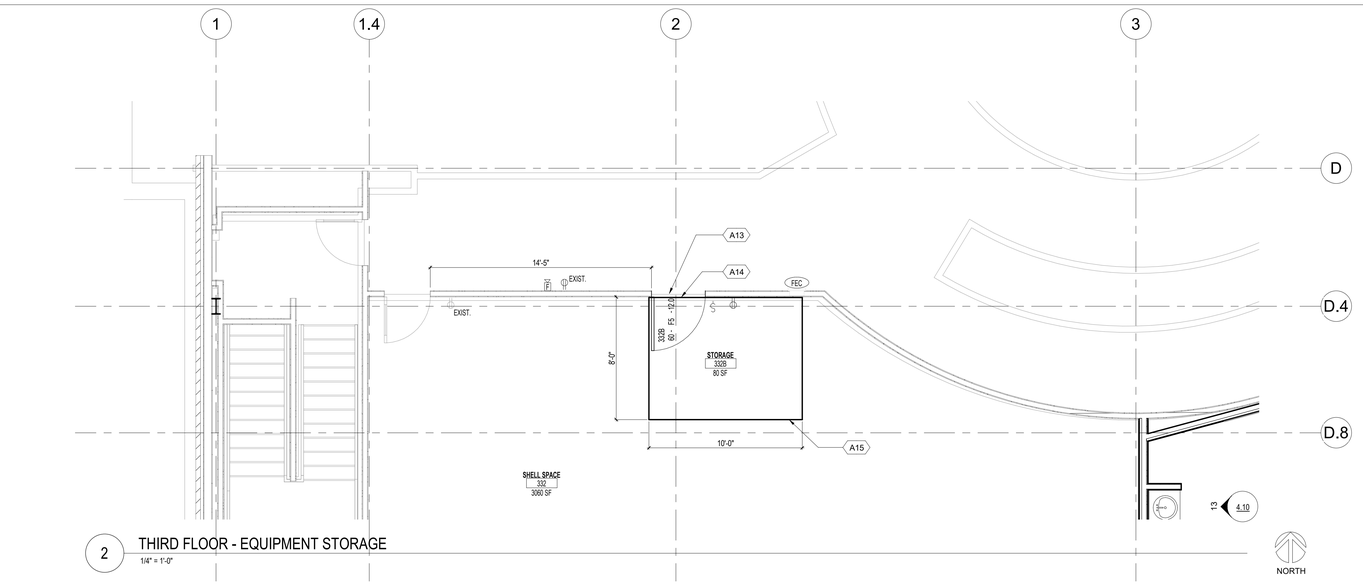

2 THIRD FLOOR - EQUIPMENT STORAGE

1/4" = 1'-0"

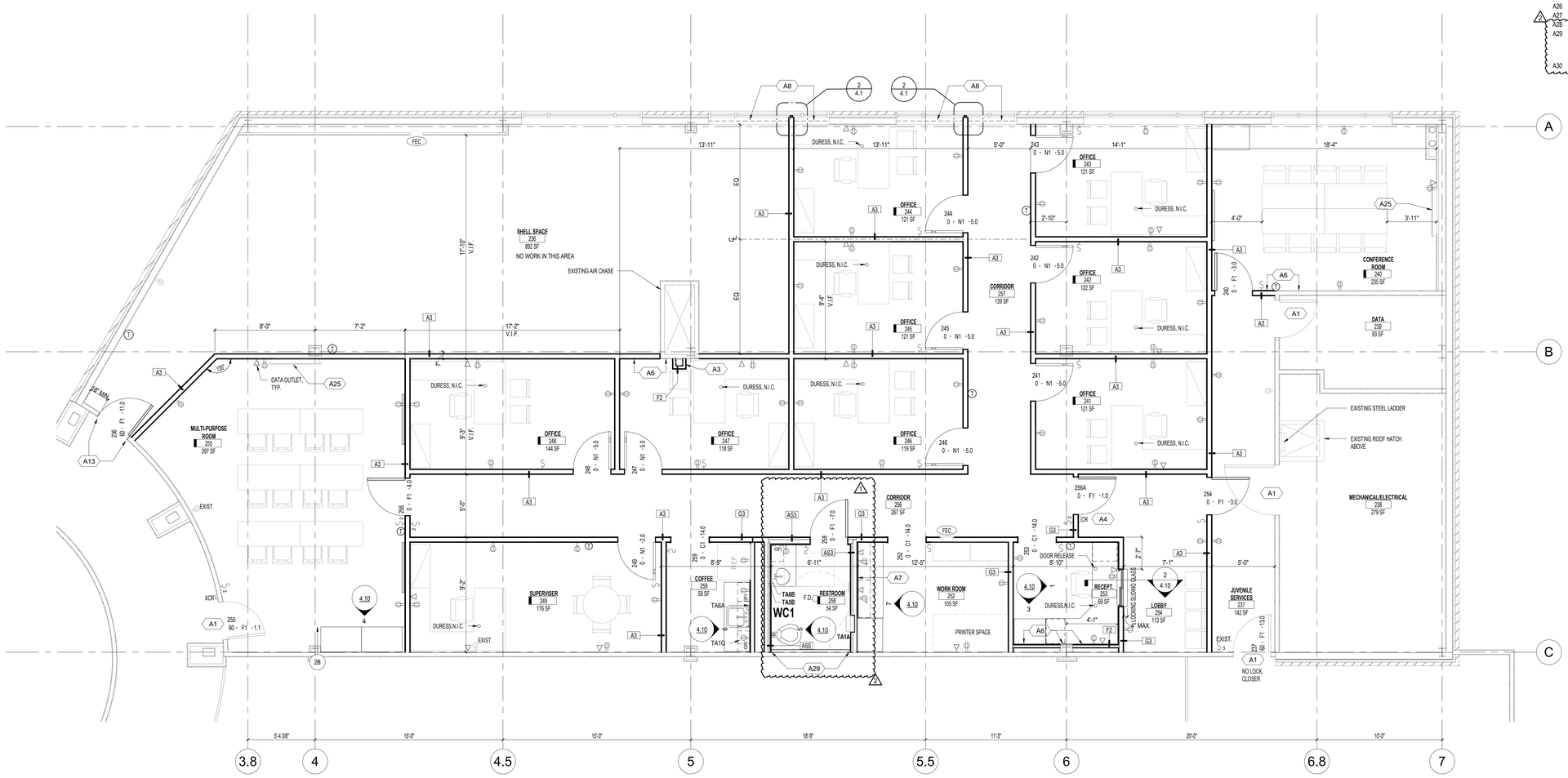

1 SECOND FLOOR PLAN

1/4" = 1'-0"

JUVENILE SERVICES

FURNITURE, FIXTURES & EQUIPMENT

REFER TO SHEET 9.0

FLOOR PLAN GENERAL NOTES:

A. REFER TO MEP DRAWINGS FOR ADDITIONAL MEP SPECIFIC INFORMATION.
B. **BEFORE SETTING WALLS, PENETRATIONS THROUGH FLOOR, ETC., CHALK LINE TO DETERMINE ANY CONFLICTS WITH EXISTING STRUCTURE. NOTIFY ARCHITECT OF ANY CONFLICT.**
C. DURESS BUTTONS - N.I.C. SHOWN FOR REFERENCE ONLY.

FLOOR PLAN NOTES BY NUMBER

A1 EXISTING DOOR TO REMAIN.
A2 PATCH AND REPAIR FLOOR AND WALL TO MATCH EXISTING FOR LIKE NEW APPEARANCE.
A3 HOLD TIGHT TO PIPE.
A4 INSTALL NEW ACCESS CONTROL CARD READER TO SECURITY SYSTEM AT ADJACENT DOOR. ALL CONDUIT AND WIRING TO BE CONNECTED IN WALL, ABOVE CEILING AND DOOR FRAME. REFER TO DETAIL 4/A1.
A6 ALIGN NEW WALL SURFACE WITH EXISTING WALL SURFACE.
A7 RECEPTACLES ABOVE COUNTER TO BE SET @ 44" A.F.F.
A8 NEW VERTICAL ROLL-UP BLINDS SHOWN DASHED.
A9 WALLTALKER MAG-RITE M2PR TO BE 48" TALL, HEAD @ 7'-0" AFF. SEE 3/9.0 FOR DETAILS.
A10 INSTALL RELOCATED ACCESS CONTROL CARD READER TO SECURITY SYSTEM AND ADJACENT DOOR. ALL CONDUIT AND WIRING TO BE CONNECTED IN WALL, ABOVE CEILING AND DOOR FRAME.
A11 EXTEND EXISTING WALL TO DECK, TO THE EXTENTS SHOWN ON PLAN, WITH METAL STUDS, SOUND ATTENUATION BATT AND GYPSUM WALL BOARD ON BOTH SIDES.
A12 ADA HARDWOOD LOCKER BENCH BY WB MANUFACTURING; MODEL LBSADA2442SS-24" X 42". BOLT SECURELY TO FLOOR.
A13 SALVAGE CARPET FROM COMMISSIONER'S SUITE TO FILL IN AND MATCH PATTERN @ NEW THRESHOLD.
A14 MAKE OPENING IN WIRE MESH FOR DOOR.
A15 WIRE MESH PARTITIONS @ 8'-0" TALL ALL FOUR SIDES, WITH WIRE MESH CEILING. ALL FOUR WIRE MESH PARTITIONS TO BE ANCHORED TO THE FLOOR.
A16 COUNTERTOP W/DVD PLAYER & TV MONITOR ABOVE. SPEAKER CABLE CONNECTION AT WALL.
A17 FLOOR BOXES, TYP. REFER TO ELECTRICAL.
A18 MIRROR-REFER TO EQUIPMENT SCHEDULE.
A19 RELOCATED FEC.
A20 10 - 12" X 12" HALF SIZE LOCKERS.
A21 EWC W/ BOTTLE FILLER.
A22 RELOCATED 24" COUNTER W/ CABINET.
A23 RELOCATED 24" DEEP SHELVES, ADD FILLER PANELS AS REQUIRED.
A24 RELOCATED 18" DEEP SHELVES.
A25 REFER TO AUDIO VISUAL WALL DETAIL ON SHEET 4.13.
A26 NEW WORKBENCHES -REFER TO FFE.
A27 INSTALL NEW CORNERGUARDS.
A28 BUILD DEMISING WALL PRIOR TO START OF ANY WORK ON THE PROJECT.
A29 TO EXTENTS SHOWN ON PLAN, INSTALL R-19 INSULATION, RSIC-1, DRYWALL FURRING CHANNELS, 2 LAYERS OF GYPSUM BOARD TO CREATE STC60 WALL SYSTEM SIMILAR TO PARTITION TYPE A5S. REFER TO RSIC-1 WALL SYSTEM FRAMING DETAIL ON SHEET 4.1.
A30 NEW PARTITION TO HAVE SOUND BATT INSULATION.

FLOOR PLAN LEGEND

F.D. NEW FLOOR DRAIN
T THERMOSTAT
CR CARD READER
ECR EXISTING CARD READER TO REMAIN
FEC FIRE EXTINGUISHER CABINET
DATA OUTLET, TYP.

COMM. NO.	1025
DATE	03/04/2021
DRAWN	GEG
CHECKED	TM

BAR IS ONE INCH IN LENGTH ON ORIGINAL DRAWING CHECK SCALE AND ADJUST ACCORDINGLY

ONE INCH

REVISIONS:
1 05/21/21 ADD #1
2 07/29/21 ADD #3

REGISTERED ARCHITECT STATE OF TEXAS TIMOTHY M. MCCARTHY 24997 Feb 24-21
Art 5 Add #2 Add #3

LBL ARCHITECTS Listen. Build. Lead.
1150 W. PANGOL MILL ROAD
SUITE 300
ARLINGTON, TEXAS 76012
PHONE (817) 265-1550
FAX (817) 265-1580
WWW.LBLARCHITECTS.COM
TBAE FIRM # BR 1350

TARRANT COUNTY SUBCOURTHOUSE IN ARLINGTON

FINISH-OUT AND RENOVATIONS

700 E. ABRAM STREET, ARLINGTON, TEXAS

SECOND FLOOR PLAN & STORAGE 332B

2.1

C:\Users\tbyguest1\Documents\1025 TCJC_SUB COURT _CENTRAL_MAN_gganVX9.GA.rvt

7/29/2021 2:48:46 PM

FLOOR PLAN LEGEND

REFER TO SHEET 2.1

FLOOR PLAN GENERAL NOTES

REFER TO SHEET 2.1

FURNITURE, FIXTURES & EQUIPMENT

REFER TO SHEET 9.0

FLOOR PLAN NOTES BY NUMBER

REFER TO SHEET 2.1

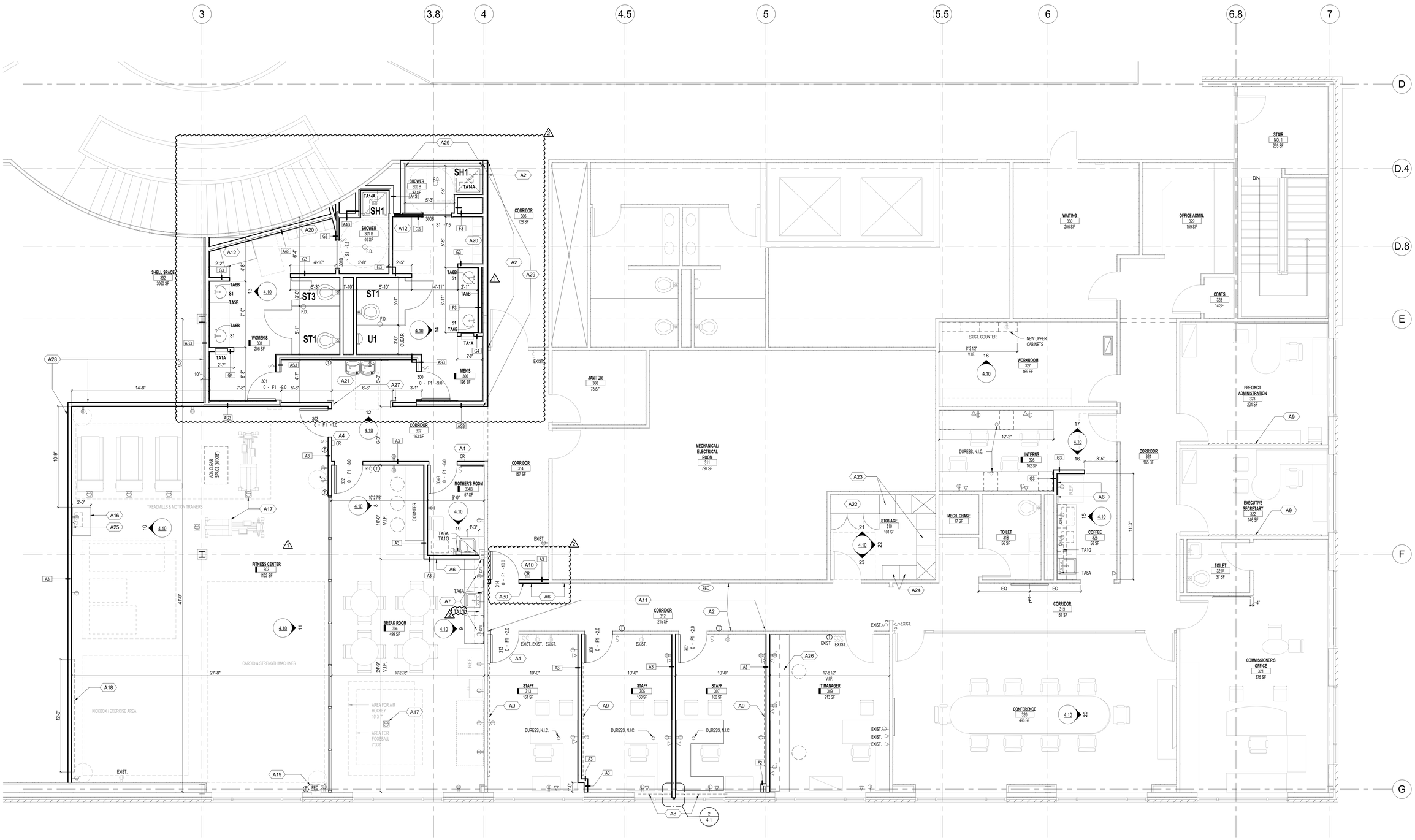

1 THIRD FLOOR PLAN

1/4" = 1'-0"

COMMISSIONER OFFICES,
BREAK ROOM, FITNESS ROOM

NORTH

C:\Users\fdiguard1\Documents\1025 TCJC_SUB COURT_CENTRAL_MAIN_jgrant9LGA.rvt

COMM. NO.	1025
DATE	03/04/2021
DRAWN	GEG
CHECKED	TM

BAR IS ONE INCH IN LENGTH ON ORIGINAL DRAWING CHECK SCALE AND ADJUST ACCORDINGLY

ONE INCH

REVISIONS:

1 05/21/21 ADD #1
2 07/29/21 ADD #3

REGISTERED ARCHITECT
STATE OF TEXAS
JOHN M. McCARTHY
Art & Mech
Add #3
7-29-21

LBL ARCHITECTS
Listen. Build. Lead.
1106 W. RANDOL MILL ROAD
SUITE 300
ARLINGTON, TEXAS 76012
PHONE (817) 265-1510
FAX (817) 265-1582
WWW.LBLARCHITECTS.COM
TBAE FIRM # BR 1350

TARRANT COUNTY SUBCOURTHOUSE IN ARLINGTON

FINISH-OUT AND RENOVATIONS

700 E. ABRAM STREET, ARLINGTON, TEXAS

THIRD FLOOR PLAN

2.2

7/29/2021 2:49:45 PM

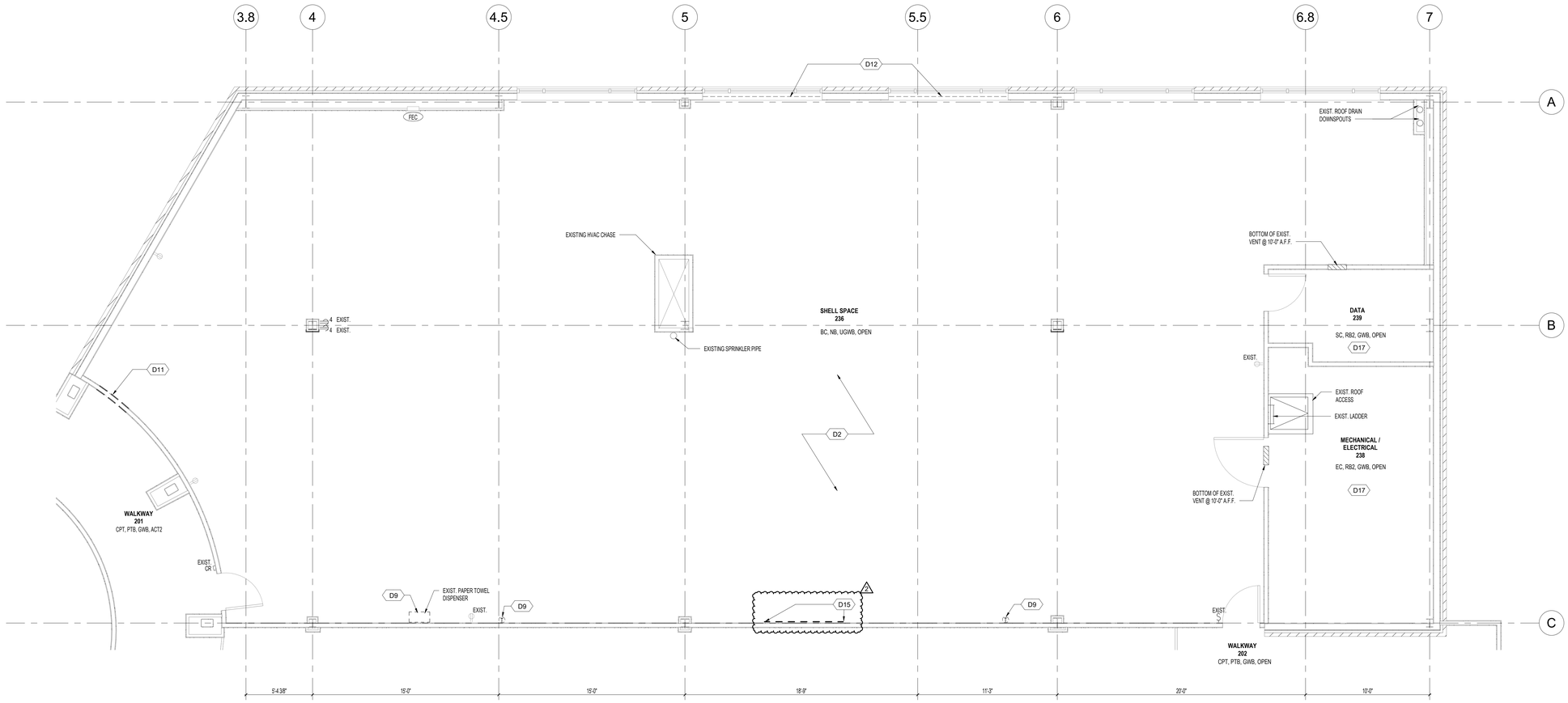

1 SECOND FLOOR DEMOLITION PLAN

1/4" = 1'-0"

NORTH

GENERAL DEMOLITION NOTES:

A. DRAWINGS & SPECIFICATIONS ARE COMPLIMENTARY COMPONENTS OF THE CONTRACT DOCUMENTS, REVIEW ALL DRAWINGS AND SPECIFICATIONS FOR THE COMPLETE SCOPE OF WORK. NOTIFY ARCHITECT IMMEDIATELY FOR CLARIFICATION IF INCONSISTENCIES, CONTRADICTIONS OR OMISSIONS ARE DISCOVERED.

B. EXISTING PLAN CONFIGURATION & BUILDING INFORMATION HAS BEEN PROVIDED BY THE OWNER AND BELIEVED TO REFLECT CURRENT CONDITIONS. CONTRACTOR TO CONFIRM ALL EXISTING CONDITIONS PRIOR TO COMMENCING WORK. NOTIFY ARCHITECT IF INCONSISTENCIES, CONTRADICTIONS OR OMISSIONS ARE DISCOVERED.

C. DO NOT SCALE DRAWINGS, IF DIMENSIONAL INFORMATION IS REQUIRED & NOT FOUND, NOTIFY ARCHITECT IMMEDIATELY FOR CLARIFICATION.

D. CONTRACTOR TO COORDINATE EXTENT OF DEMOLITION WORK REQUIRED WITH WORK SHOWN ON PROPOSED FLOOR PLANS.

E. PROTECT ALL EXISTING WORK TO REMAIN & REPAIR DAMAGED AREAS TO MATCH EXISTING ADJACENT SURFACES UNLESS NOTED OTHERWISE.

F. CONTRACTOR TO COORDINATE DEMOLITION ACTIVITIES WITH OWNER SO AS TO MAINTAIN FULL FUNCTIONALITY OF ADJACENT OWNER OCCUPIED SPACES.

G. CONTRACTOR TO MAINTAIN MEANS OF EGRESS PATHWAYS AT ALL TIMES. COORDINATE ALTERNATE PROVISIONS AND OBTAIN APPROVAL FROM OWNER AND AUTHORITY HAVING JURISDICTION IF EXISTING MEANS OF EGRESS MUST BE COMPROMISED.

H. HALF-TONED ITEMS INDICATE EXISTING CONSTRUCTION TO BE PROTECTED & REMAIN.

I. BOLD DASHED ITEMS ARE THOSE WHICH ARE TO BE REMOVED.

J. WHERE EXISTING FINISHES ARE TO BE REMOVED, PATCH & PREPARE SUBSTRATE TO RECEIVE NEW FINISHES IN ACCORDANCE WITH NEW FINISH MATERIAL MANUFACTURER'S RECOMMENDATIONS.

K. UTILITIES THAT REMAIN, WITHIN EXISTING WALLS TO BE DEMOLISHED, ARE TO BE REROUTED AS REQUIRED TO FACILITATE THE NEW PLAN CONFIGURATION.

L. LABEL & PACKAGE ALL COMPONENTS OF SALVAGED ITEMS TO BE DELIVERED TO OWNER. COORDINATE LABEL & PACKAGE REQUIREMENTS & STORAGE LOCATION WITH OWNER.

M. CONTRACTOR TO PROVIDE FIRE, SMOKE, DIRT, DUST & NOISE CONTAINMENT BARRIERS BETWEEN THE WORK AREA & THE ADJACENT OWNER OCCUPIED SPACES.

N. CONTRACTOR TO COORDINATE ALL UTILITY SYSTEM SHUTDOWN ACTIVITIES IN ADVANCE WITH THE OWNER AND MAINTAIN FULL FUNCTIONALITY OF ADJACENT OWNER OCCUPIED SPACES.

O. CONTRACTOR TO REMOVE ALL DEMOLITION DEBRIS AND CONSTRUCTION DEBRIS ON A DAILY BASIS, COORDINATE MEANS, METHODS & ROUTES AND INFECTION CONTROL PROTOCOLS WITH THE OWNER.

P. WHERE SELECTIVE DEMOLITION IS REQUIRED ADJACENT TO EXISTING SURFACES TO REMAIN, PATCH AND REPAIR TO MATCH EXISTING SURFACES UNLESS NOTED OTHERWISE.

Q. ALL UTILITY SYSTEMS & OTHER COMPONENTS THAT ARE SCHEDULED FOR DISCONNECTION SHALL BE REMOVED IN THEIR ENTIRETY, "DISCONNECT, CAP & ABANDON IN PLACE" IS NOT ACCEPTABLE – UNLESS SPECIFICALLY NOTED OTHERWISE.

EXISTING FINISHES

FLOOR:

CPT = CARPET

WOM = WALK OFF MAT

PTFL = PORCELAIN TILE (14" X 14")

PTFL6 = PORCELAIN TILE (6" X 6")

VCT1 = VINYL COMPOSITION TILE - SILVERPOINT

VCT2 = VINYL COMPOSITION TILE - CHARCOAL STICK

EC = EPOXY COATED

SC = SEALED CONCRETE

BC = BARE CONCRETE

BASE:

RB1 = RUBBER BASE - STRAIGHT

RB2 = RUBBER BASE - COVED

PTB = PORCELAIN TILE BASE

NB = NO BASE

WALL:

GWB = GYPSUM WALL BOARD, TEXTURE & PAINTED

ACC = ACCENT PAINTED WALL

UGWB = UNPAINTED GYPSUM WALL BOARD

WAIN = 4'-5" TILE WAINSCOT

CEILING:

ACT1 = ACOUSTICAL CEILING TILE 2X2 - CORTEGA

ACT2 = ACOUSTICAL CEILING TILE 2X2 - CIRRUS

GBC = GYPSUM BOARD CEILING - TEXTURED & GLAZED PAINT

OPEN = OPEN TO STRUCTURE

TOILET PARTITIONS:
PLASTIC LAMINATE

DEMOLITION FLOOR PLAN NOTES BY NUMBER

D1 REMOVE PORTION OF EXISTING WALL AS REQUIRED TO CREATE NEW OPENING.
D2 OWNER TO REMOVE EXISTING FURNITURE AND EQUIPMENT CURRENTLY IN THIS SPACE.
D3 REMOVE EXISTING DOOR AND FRAME. SALVAGE ALL DOOR HARDWARE, BOX UP AND PROVIDE TO OWNER.
D4 REMOVE EXISTING FLOORING AND BASE CAREFULLY. CARPET TILES TO BE USED TO FILL IN AT OTHER LOCATIONS INDICATED ON THE PLANS.
D5 REMOVE EXISTING CABINET AND SINK AND CAP PLUMBING BELOW FINISH FLOOR AND ABOVE NEW DOOR.
D6 REMOVE EXISTING MILLWORK.
D7 REMOVE EXISTING FURR DOWN.
D8 REMOVE EXISTING WALL.
D9 REMOVE EXISTING DEVICE. PATCH GYPSUM BOARD.
D10 COORDINATE EXISTING MILLWORK TO BE RELOCATED TO STORAGE 310 WITH NEW FLOOR PLAN . REMOVE CAREFULLY.
D11 REMOVE PORTION OF EXISTING WALL AS REQUIRED TO CREATE NEW OPENING FOR NEW DOOR & FRAME.
D12 REMOVE EXISTING WINDOW SHADE DEVICE AND DELIVER TO OWNER.
D13 REMOVE EXISTING RUBBER BASE TO EXTENTS SHOWN ON PLAN.
D14 REMOVE EXISTING ACCESS CONTROL CARD READER AND ASSOCIATED WIRING. CARD READER TO BE RELOCATED-REFER TO FLOOR PLAN FOR LOCATION.
D15 REMOVE EXISTING DRYWALL AS REQUIRED TO INSTALL SOUND ATTENUATION BATT TO EXTENTS SHOWN DASHED ON FLOOR PLAN.
D16 FEC TO BE RELOCATED. PATCH WALL WHERE EXISTING FEC WAS REMOVED.
D17 EXISTING FINISHES TO REMAIN.
⚠2 D18 REMOVE EXISTING DUCT SEALANT, INSULATION, SYSTEM AND ACOUSTICAL UNITS FROM THIS ROOM ON TO EXTENTS INDICATED ON PLAN.

DEMOLITION LEGEND

WALL, DOOR, MILLWORK, ETC. TO BE REMOVED.

EXISTING TO REMAIN

COMM. NO.	1025
DATE	03/04/2021
DRAWN	GEG
CHECKED	TM

BAR IS ONE INCH IN LENGTH ON ORIGINAL DRAWING CHECK SCALE AND ADJUST ACCORDINGLY

ONE INCH

REVISIONS:
2 07/29/21 ADD #3

REGISTERED ARCHITECT TERRY MICHAEL LEE 24990 STATE OF TEXAS
Architect's Seal Add #3

1156 W. RANCH MILL ROAD
SUITE 300
ARLINGTON, TEXAS 76012
PHONE (817) 265-1520
FAX (817) 265-1522
WWW.LBLARCHITECTS.COM
TBAE FIRM # BR 1350

LBL ARCHITECTS Listen. Build. Lead.

TARRANT COUNTY SUBCOURTHOUSE IN ARLINGTON

FINISH-OUT AND RENOVATIONS

700 E. ABRAM STREET, ARLINGTON, TEXAS

SECOND FLOOR DEMOLITION PLAN

2.4

C:\Users\lbjguest1\Documents\1025 TCJC_SUB COURT_CENTRAL_MAN_jgpramVSK.GA.rvt

7/29/2021 2:48:30 PM

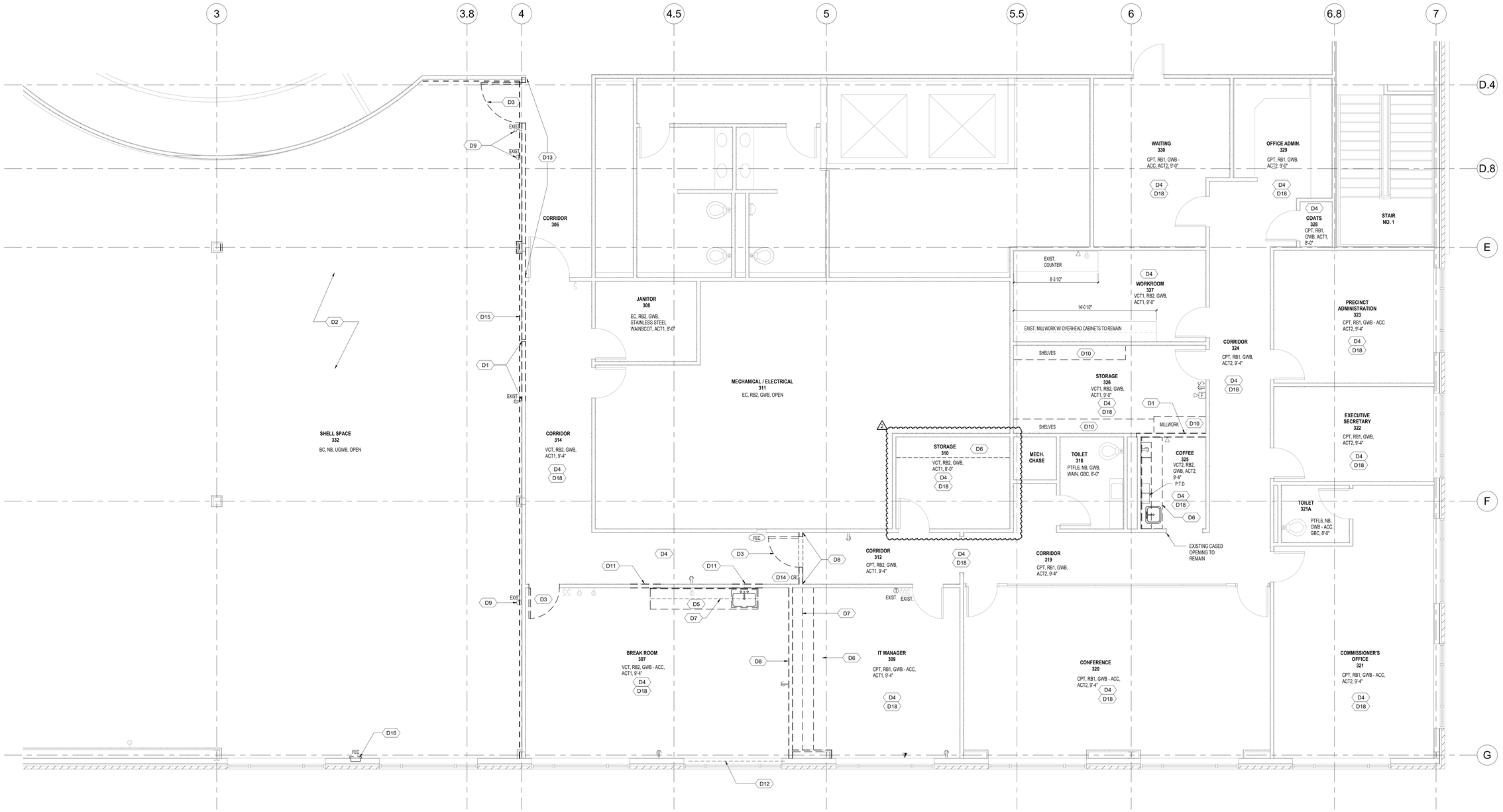

1 THIRD FLOOR DEMOLITION PLAN

1/4" = 1'-0"

NORTH

DEMOLITION GENERAL NOTES

REFER TO SHEET 2.4

DEMOLITION NOTES BY NUMBER

REFER TO SHEET 2.4

EXISTING FINISHES

REFER TO SHEET 2.4

COMM. NO.	1025
DATE	03/04/2021
DRAWN	GEG
CHECKED	TM

BAR IS ONE INCH IN LENGTH ON ORIGINAL DRAWING CHECK SCALE AND ADJUST ACCORDINGLY

ONE INCH

REVISIONS:
2 07/29/21 ADD #3

LBL ARCHITECTS Listen. Build. Lead.
156 W. RANDOL MILL ROAD
SUITE 500
ARLINGTON, TEXAS 76012
PHONE (817) 265-1540
FAX (817) 265-1582
WWW.LBLARCHITECTS.COM
TBAE FIRM # BR- 1550

TARRANT COUNTY SUBCOURTHOUSE IN ARLINGTON

FINISH-OUT AND RENOVATIONS

700 E. ABRAM STREET, ARLINGTON, TEXAS

THIRD FLOOR DEMOLITION PLAN

2.5

C:\Users\tlbguest1\Documents\1025 TCJC_SUB.COURT_CENTRAL_MAIN_ggrant9L.rvt

7/28/2021 2:45:52 PM

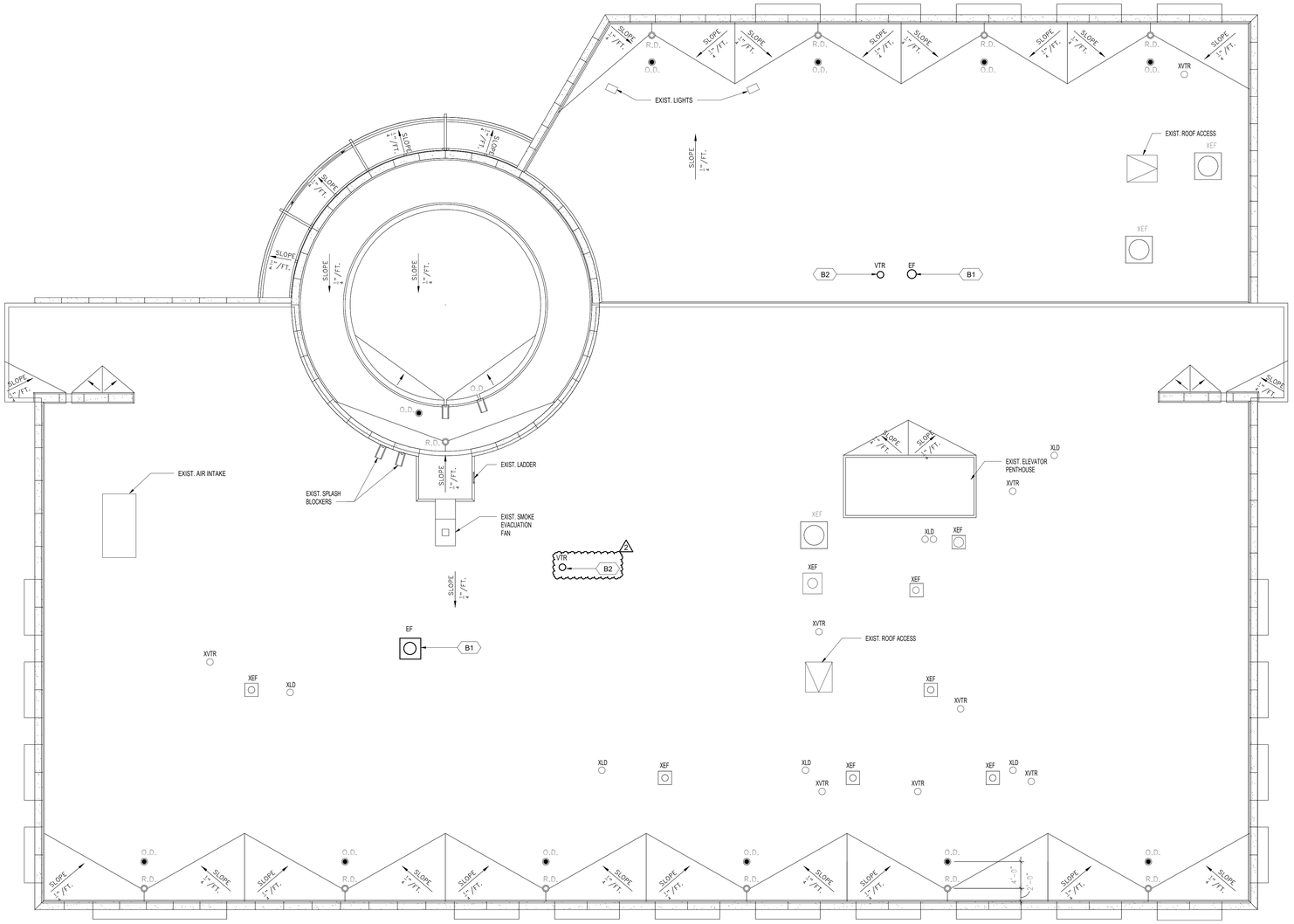

1 ROOF PLAN
1/8" = 1'-0"

NORTH

ROOF WARRANTY:

EXISTING ROOF IS GUARRANTEED BY SIPLAST (469-995-2200), GUARANTEE No.34430 CONTRACTOR TO CONTACT SIPLAST'S INSIDE TECHNICIAN FOR DFW AREA.

ROOF PLAN GENERAL NOTES:

A. REFER TO MECHANICAL/ ELECTRICAL DRAWINGS FOR MECHANICAL, PLUMBING AND ELECTRICAL EQUIPMENT ON ROOF.

ROOF PLAN NOTES BY NUMBER

B1 NEW EXHAUST FAN. REFER TO MEP DRAWINGS.
B2 NEW VENT THROUGH ROOF. REFER TO MEP DRAWINGS.

ROOF PLAN LEGEND

X = EXISTING
EF = EXHAUST FAN
LD = LIGHTNING DEVICE
OD = EXISTING OVERFLOW DRAIN
RD = EXISTING ROOF DRAIN

COMM. NO.	1025
DATE	03/04/2021
DRAWN	GEG
CHECKED	TM

BAR IS ONE INCH IN LENGTH ON ORIGINAL DRAWING CHECK SCALE AND ADJUST ACCORDINGLY

ONE INCH

REVISIONS:
2 07/29/21 ADD #3

REGISTERED ARCHITECT
STATE OF TEXAS
Art Gallery
Add #3
07-29-21

LBL ARCHITECTS
Listen. Build. Lead.
1106 W. RANDOL MILL ROAD
SUITE 300
ARLINGTON, TEXAS 76012
PHONE (817) 265-1510
FAX (817) 265-1582
WWW.LBLARCHITECTS.COM
TBAE FIRM # BR 1350

FINISH-OUT AND RENOVATIONS
TARRANT COUNTY SUBCOURTHOUSE IN ARLINGTON
700 E. ABRAM STREET, ARLINGTON, TEXAS

ROOF PLAN
2.9

7/28/2021 2:48:52 PM

C:\Users\lbl\guest1\Documents\1025 TCJC_SUB COURT_CENTRAL_MAIN_ggrant\09LGA.rvt

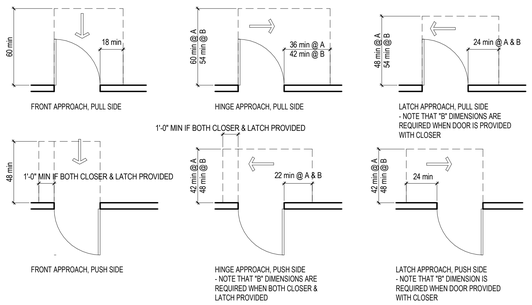

MANEUVERING CLEARANCES AT MANUAL SWINGING DOORS & GATES

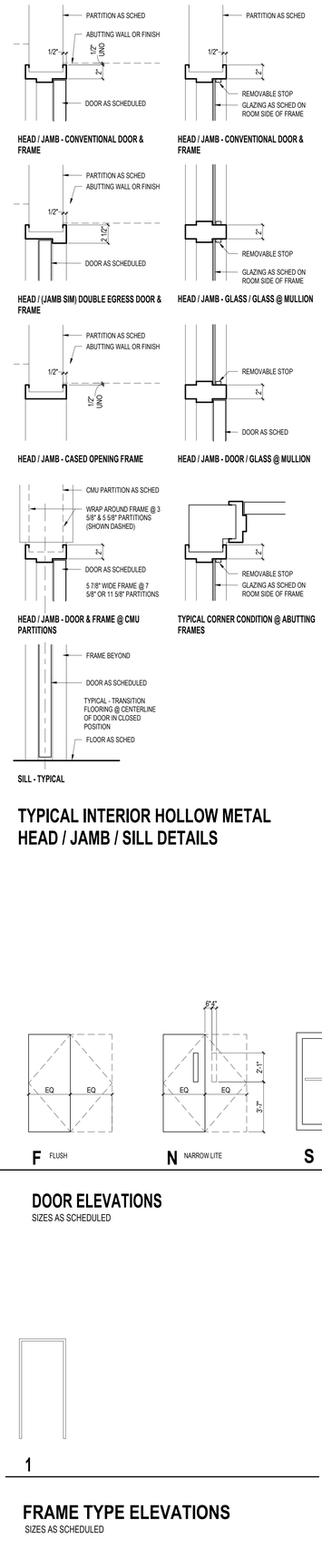

TYPICAL INTERIOR HOLLOW METAL HEAD / JAMB / SILL DETAILS

GENERAL NOTES

A. TYPICAL DOOR DETAILS ARE SHOWN ON THIS SHEET. SEE FLOOR PLANS FOR SPECIALIZED PLAN DETAIL REFERENCES FOR ATYPICAL CONDITIONS.
B. DOOR FRAME THROAT DIMENSIONS: REFER TO FLOOR PLANS FOR THE APPLICABLE PARTITION TYPE.
C. REFER TO INTERIOR FINISH DRAWINGS FOR DOOR FINISH (I.E. TRANSPARENT OR PLAM CLAD, PAINTED, ETC.)
D. "C' DOOR TYPE IS A CASED OPENING. REFER TO SIZE AND FRAME MATERIAL IN SCHEDULE.

DOOR TYPES SCHEDULE NOTES

EXAMPLE OF DOOR ID ON PLAN

1233 - DOOR NO.
90 - FIRE RATING
F10 - DOOR TYPE
1 - HARDWARE SET

DOOR FRAME MATERIAL / TYPE
H.M. - HOLLOW METAL / STEEL
ALUMINUM
WOOD - WOOD OR PLAM CLAD AS NOTED
PLAM - PLASTIC LAMINATE CLAD
FIBERGLASS

DOOR MATERIAL / TYPE
H.M. - HOLLOW METAL / STEEL
ALUMINUM
WOOD - WOOD OR PLAM CLAD AS NOTED
PLAM - PLASTIC LAMINATE CLAD
FIBERGLASS
GLASS
AL/GL - ALUMINUM & GLASS

FIRE RATING
0 - NO RATING
20 - 20 MINUTES
45 - 45 MINUTES
60 - 60 MINUTES
90 - 90 MINUTES
180 - 3 HOURS

DOOR GLAZING SCHEDULE
INTERIOR DOORS: 1/4" CLEAR TEMPERED GLASS EXCEPT:
- 1/4" LAMINATED CLEAR GLASS @ RATED DOORS
- 1/4" FIRE RATED CERAMIC GLASS WHERE NOTED

EXTERIOR DOORS: 1" INSULATED GLASS, TEMPERED WHERE REQUIRED.

REFER TO BORROWED LITE ELEVATIONS FOR GLAZING TYPES.

DOOR HARDWARE FUNCTIONS

1.

EXAMPLE: DOOR TAG ON PLANS

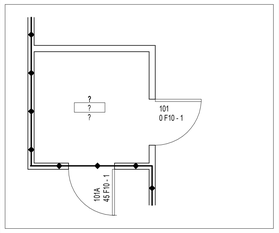

DOOR TYPES SCHEDULE

DOOR TYPE	DOORS WIDTH	HEIGHT	MATL	GLAZ	FRAME ELEV	MATL	GLAZ	REMARKS
C1	3' - 0"	7' - 0"	-		1	H.M.		CASED OPENING
F1	3' - 0"	7' - 0"	WOOD			H.M.		
F5	3' - 6"	7' - 0"	WOOD		1	H.M.		
N1	3' - 0"	7' - 0"	WOOD	YES	1	H.M.		
S1	3' - 0"	7' - 0"			1			SLIDING POCKET DOOR.

1

DOOR SCHEDULE REMARK NOTES:

HARDWARE SETS ARE SHOWN ON THE DOOR TAG AS DESCRIBED UNDER "DOOR TYPES SCHEDULE NOTES". HARDWARE SET NUMBERS ARE AS FOLLOWS:

1.0 STOREROOM LOCK
1.1 CLASSROOM LOCK
2.0 OFFICE LOCK
3.0 OFFICE LOCK
4.0 SECURITY ENTRY LOCK
5.0 PASSAGE LATCH
6.0 STOREROOM LOCK
7.0 PRIVACY LOCK
7.5 PRIVACY LOCK
8.0 PASSAGE LATCH
9.0 NO LOCK
10.0 STOREROOM / RIM EXIT DEVICE
11.0 STOREROOM LOCK
12.0 STOREROOM LOCK
13.0 PASSAGE LATCH
14.0 CASED OPENING

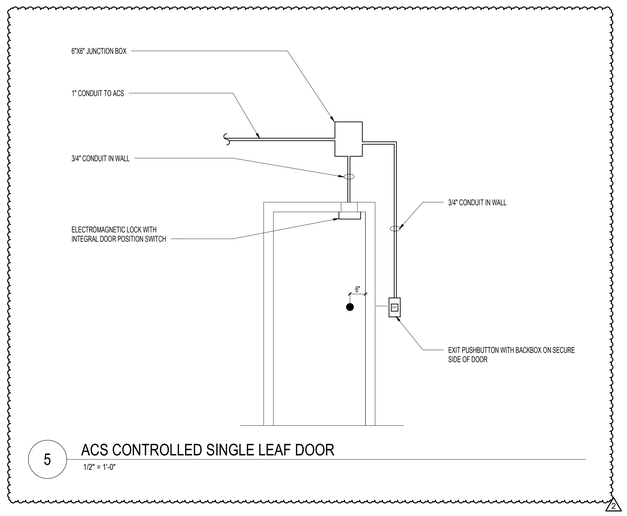

5 ACS CONTROLLED SINGLE LEAF DOOR
1/2" = 1'-0"

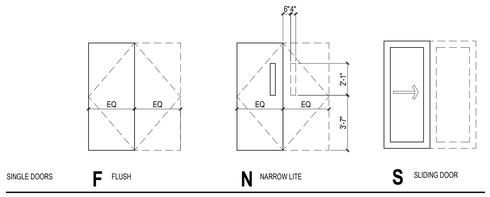

DOOR ELEVATIONS
SIZES AS SCHEDULED

1

FRAME TYPE ELEVATIONS
SIZES AS SCHEDULED

GENERAL GLAZING NOTES

1. ALL INTERIOR GLASS SHALL BE 1/4" THICK CLEAR TEMPERED UNLESS NOTED OTHERWISE.
2. PROVIDE TEMPERED GLASS AT ALL LOCATIONS REQUIRED BY THE BUILDING CODE AND ALL OTHER APPLICABLE CODES; HOWEVER, IN SOME CASES, GLASS MAY BE LABELED AS TEMPERED EVEN THOUGH IT MAY NOT BE REQUIRED BY THE APPLICABLE CODES.

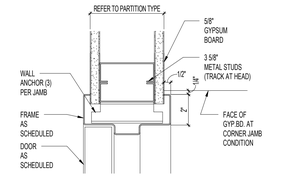

4 TYPICAL JAMB / HEAD
3" = 1'-0"

COMM. NO. 1025
DATE 03/04/2021
DRAWN GEG
CHECKED TM

BAR IS ONE INCH IN LENGTH ON ORIGINAL DRAWING CHECK SCALE AND ADJUST ACCORDINGLY

ONE INCH

REVISIONS:
1 05/21/21 ADD #1
2 07/29/21 ADD #3

LBL ARCHITECTS
Listen. Build. Lead.
1190 W. RANDOL MILL ROAD
SUITE 300
ARLINGTON, TEXAS 76012
PHONE (817) 265-1582
FAX (817) 265-1582
WWW.LBLARCHITECTS.COM
TBAE FIRM # BR 13501

TARRANT COUNTY SUBCOURTHOUSE IN ARLINGTON

FINISH-OUT AND RENOVATIONS

700 E. ABRAM STREET, ARLINGTON, TEXAS

DOOR SCHEDULE, DOOR TYPES, & FRAME TYPES

3.1

C:\Users\tbgeist\Documents\1025 TC-IC_SUB COURT_CENTRAL_MAIN_ggeistVB.GA.rvt

7/29/2021 2:45:03 PM

PARTITION TYPES

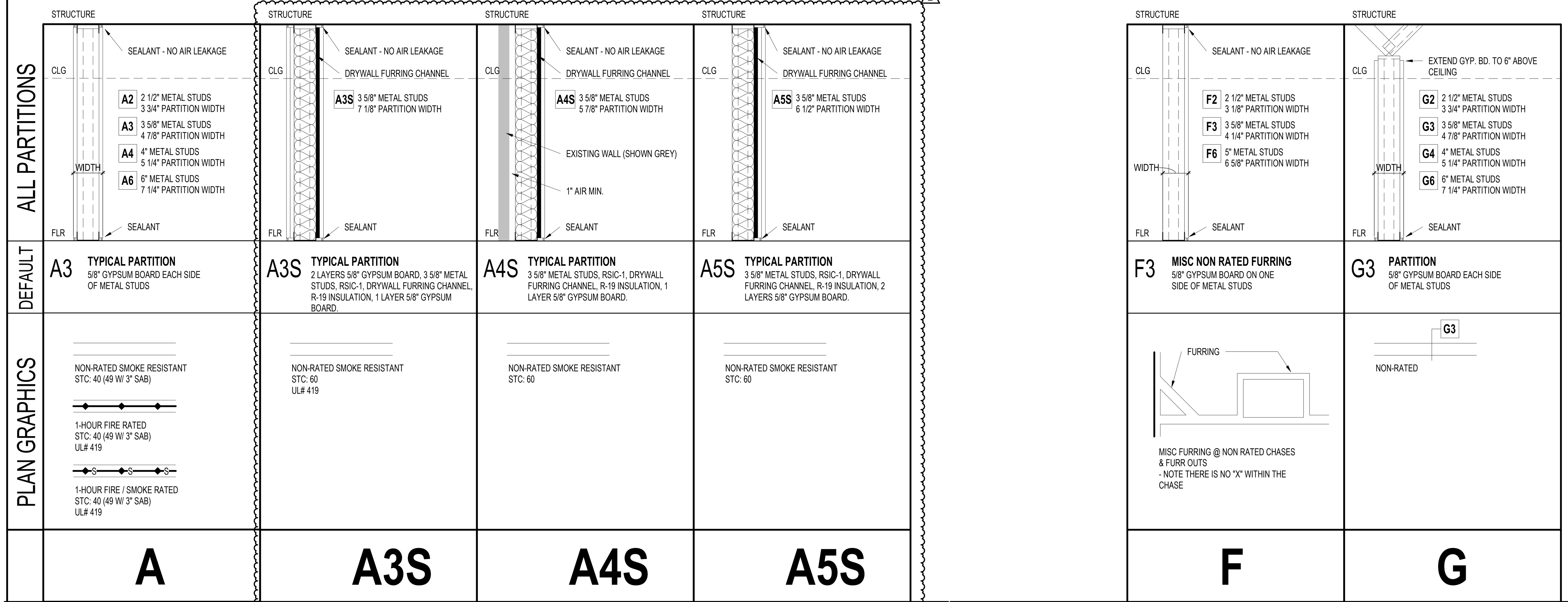

PARTITION NOTES

1. INTERIOR METAL STUD FRAMING @ 16" O.C., U.N.O.
2. PROVIDE 20 GAGE DOUBLE STUDS @ EACH DOOR AND WINDOW / BORROWED LITE JAMB, UNLESS DETAILED OTHERWISE.
3. PROVIDE 16 GAGE METAL STRAP BLOCKING FOR ALL WALL MOUNTED ITEMS, UNLESS NOTED OR DETAILED OTHERWISE. EXTEND BLOCKING ACROSS 3 STUDS MINIMUM.
4. REFER TO FLOOR PLANS FOR LOCATIONS OF SMOKE AND / OR FIRE RATED PARTITIONS. REFER TO WALL PRIORITIY LEGEND FOR CONDITIONS WHERE FIRE RATED PARTITIONS INTERSECT OTHER PARTITIONS.
5. REFER TO THE GYPSUM BOARD SCHEDULE THIS SHEET FOR A DESCRIPTION OF THE TYPE OF GYPSUM BOARD PANELS TO BE USED.
   - REFER TO OTHER SCHEDULES AND DETAILS FOR INTERIOR FINISHES. PARTITION TYPES SHOWN THIS SHEET REFER TO BASE WALL ONLY.
6. INTERIOR PARTITIONS ARE DIMENSIONED FROM THE FACE OF FINISH WALL.
7. FOR PARTITIONS THAT EXTEND TO STRUCTURE, THE "LINE OF STRUCTURE" AS SHOWN AT THE HEAD CONDITION OF EACH PARTITION TYPE IS DIAGRAMATIC ONLY AND DOES NOT INDICATE EXACT CONSTRUCTION CONDITIONS. TERMINATE RATED PARTITIONS AT THE UNDERSIDE OF STRUCTURAL DECK IN ORDER TO MAINTAIN RATING. PROVIDE APPROPRIATE DRYWALL FRAMING TO OFFSET AROUND STRUCTURE OR OTHER OBSTRUCTIONS SUCH AS PIPING OR DUCT WORK.

   - PARTITIONS MAY TERMINATE AT STRUCTURAL MEMBERS WITH A FIRE RATING GREATER THAN OR EQUAL TO THE PARTITION, PROVIDED THAT RATING IS CONTINUOUS TO THE STRUCTURAL DECK ABOVE.

   - NON-RATED PARTITIONS THAT EXTEND TO STRUCTURE SHALL TERMINATE AT UNDERSIDE OF STRUCTURAL DECK TO MAINTAIN A CONTINUOUS PLANE OF GYPSUM BOARD AS A BARRIER TO NOISE AND RESIST THE PASSAGE OF SMOKE..
8. ALL PARTITIONS EXTENDING TO STRUCTURE ABOVE SHALL TERMINATE WITH DEFLECTION TRACKS - SEE TYPICAL DETAILS THIS SHEET.
9. BRACE ALL GYPSUM BOARD PARTITIONS NOT EXTENDING TO STRUCTURE ABOVE.
10. IDENTIFY ALL RATED PARTITIONS WITH LABELS 6 INCHES ABOVE THE CEILING OR 10 FEET MAX. ABOVE THE FLOOR IF NO CEILING. USE 1 1/2" HIGH LETTERS, CLEARLY LEGIBLE & READABLE AGAINST A CONTRASTING BACKGROUND.
11. UL DESIGN NUMBERS REFER TO THE UL LLC FIRE, LATEST EDITION.
12. FIRE RATED PARTITIONS TO HAVE FIRESTOPPING SEALANT SYSTEMS INSTALLED AT HEAD, SILL, AND JUNCTURES WITH DISSIMILAR MATERIALS, ETC., AND AROUND ALL PENETRATIONS AND OPENINGS.
13. NON-RATED PARTITIONS TO HAVE ACOUSTICAL SEALANT INSTALLED AT HEAD, SILL, AND JUNCTURES WITH DISSIMILAR MATERIALS, ETC., AND AROUND ALL PENETRATIONS AND OPENINGS.

PLUMBING CHASE SCHEDULE - MTL STUDS

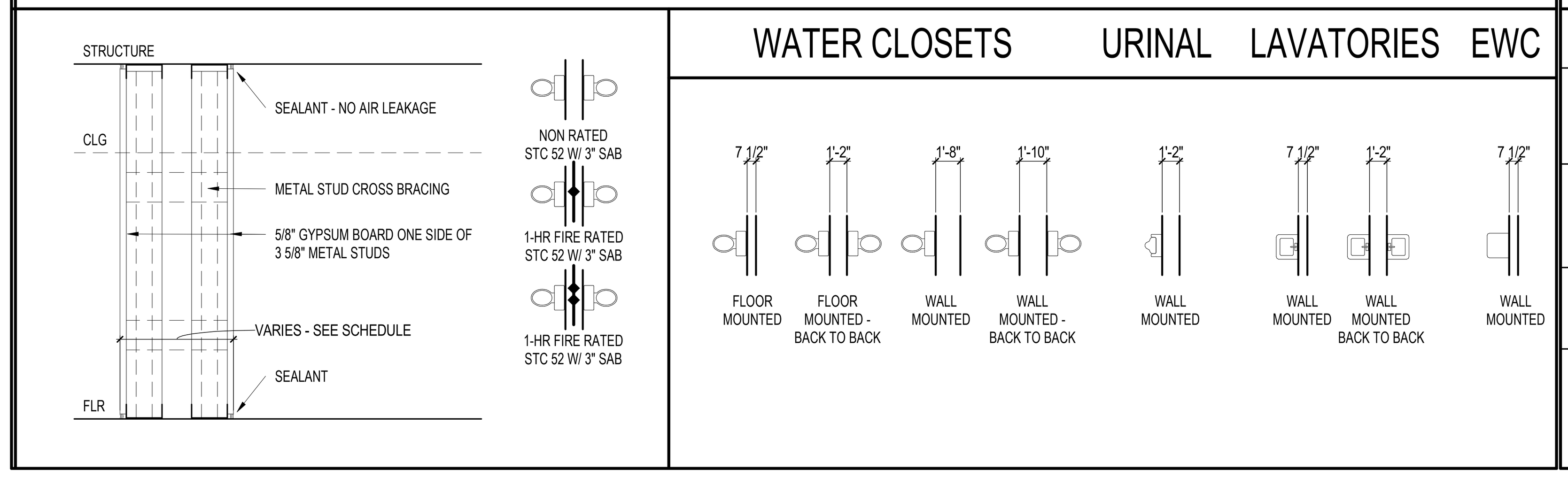

GYPSUM BOARD SCHEDULE

5/8" TYPE "X" GYPSUM BOARD	ALL PARTITIONS, UNO, OR NOTED OTHERWISE ON DRAWINGS
5/8" ABUSE & FIRE RESISTANT GYPSUM BOARD	USE WHERE IDENTIFIED ON PLANS
5/8" MOLD, WATER, ABUSE & FIRE RESISTANT (MWFA) GYPSUM BOARD	PRIORITY 1: PROVIDE BEHIND ALL WET WALL PARTITIONS W/ PLUMBING FIXTURES (WATER CLOSETS, URINALS, LAVATORIES, EWC'S, ETC) TO A HEIGHT OF 4' AFF AND 8' WIDE (CENTER ON FIXTURE)
5/8" FIBER CEMENT OR GP DENS SHIELD	PRIORITY 1: PARTITIONS EXPOSED DIRECTLY TO RUNNING WATER & SCHEDULED TO RECEIVE TILE. EXAMPLES: SHOWERS, CART WASH, HYDROTHERAPY, BATHTUBS
5/8" MOISTURE RESISTANT (GREEN ROCK)	PRIORITY 2: USE AT ALL TOILET ROOMS, HOUSEKEEPING / JANITOR CLOSETS, OPERATING ROOM'S, CATH LABS, ENDOSCOPY, TRAUMA, DECONTAM, AND SOILED UTILITY ROOMS. NOTE THAT PRIORITY 1 BOARDS TAKE PRECEDENT

EXAMPLE FLOOR PLAN

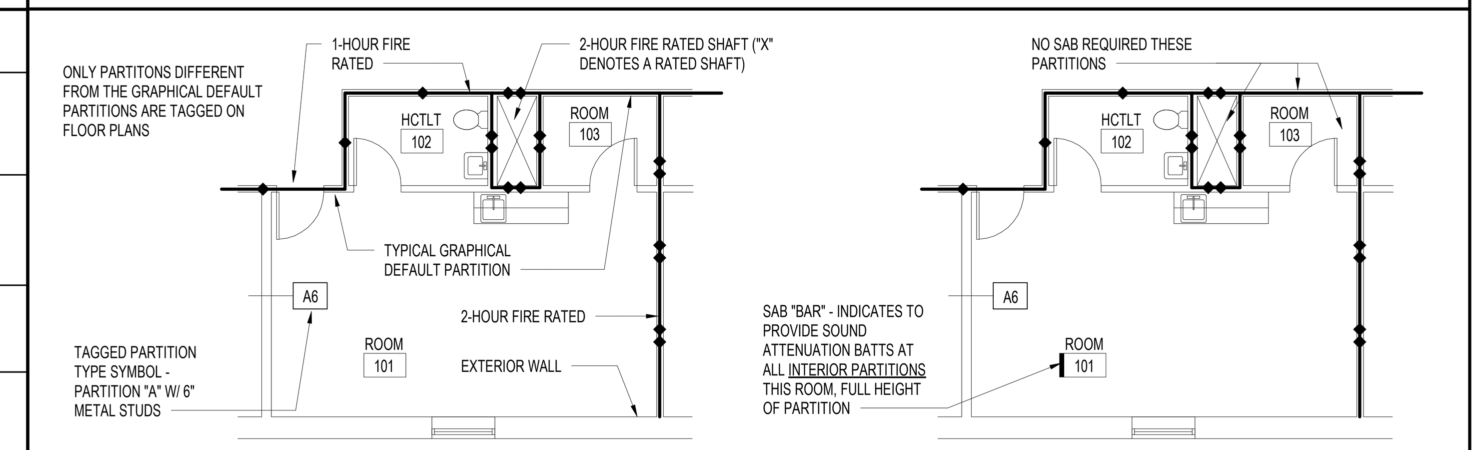

EXAMPLE FLOOR PLAN - PARTITION IDENTIFICATION

EXAMPLE FLOOR PLAN - SOUND ATTENUATION

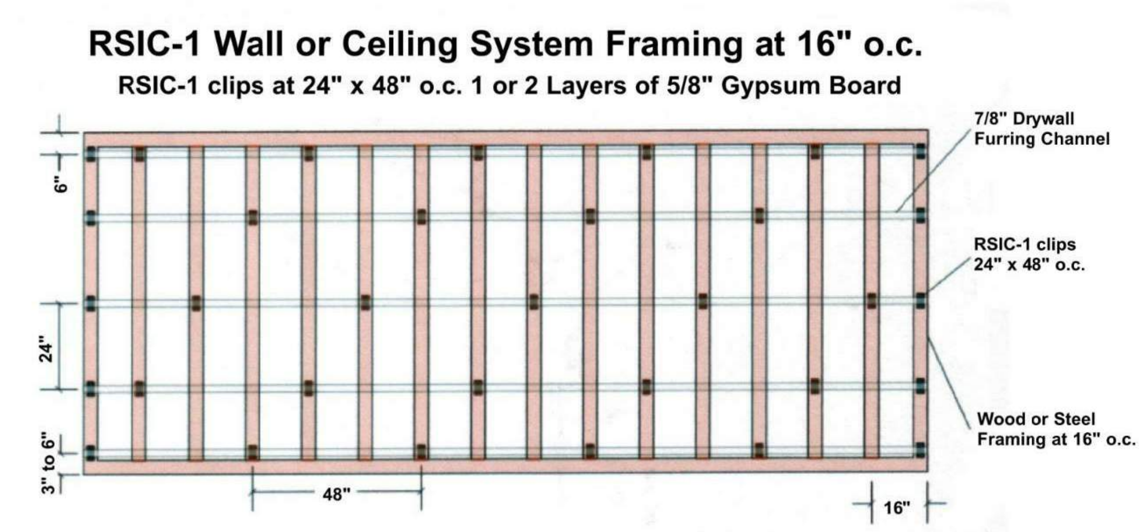

3 RSIC-1 WALL SYSTEM FRAMING DETAIL
NTS

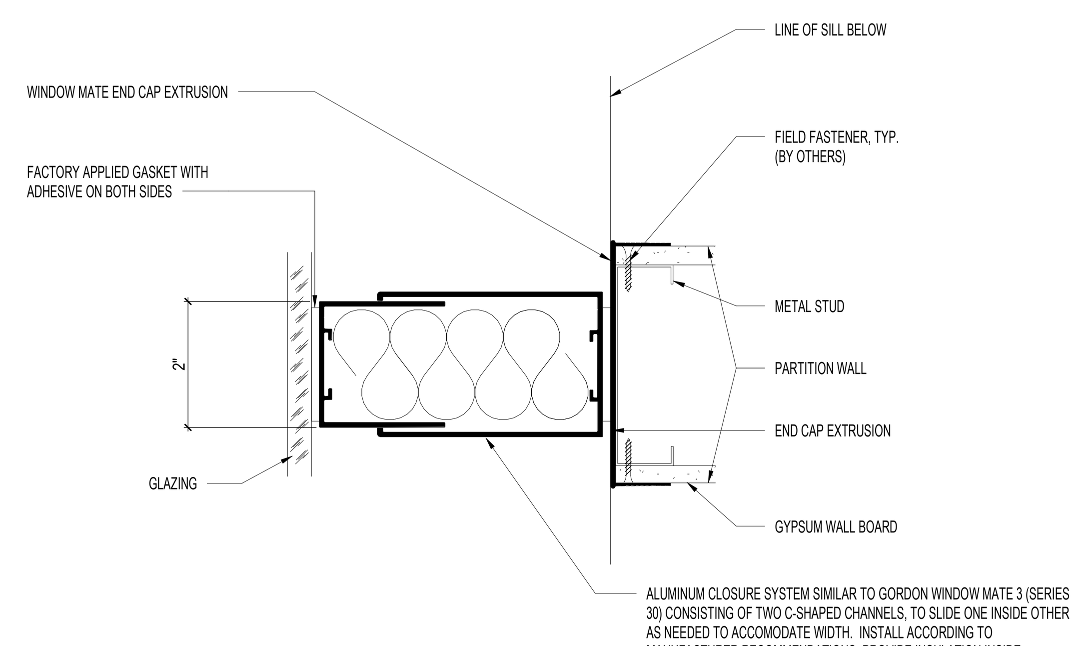

ALUMINUM CLOSURE SYSTEM SIMILAR TO GORDON WINDOW MATE 3 (SERIES 30) CONSISTING OF TWO C-SHAPED CHANNELS, TO SLIDE ONE INSIDE OTHER AS NEEDED TO ACCOMODATE WIDTH. INSTALL ACCORDING TO MANUFACTURER RECOMMENDATIONS. PROVIDE INSULATION INSIDE CHANNELS FOR SOUND CONTROL. CHANNELS CAN BE FORMED USING DIE CAST ALUMINUM OR MINIMUM 0.040 PREFINISHED ALUMINUM BREAK METAL. COLOR AND FINISH TO MATCH EXISTING WINDOW FRAME.

2 SECTION @ WINDOW
6" = 1'-0"

TYPICAL CONTROL JOINTS

SINGLE LAYER GYPSUM BOARD SHOWN
-DOUBLE LAYER GYPSUM BOARD APPLICATION SIMILAR

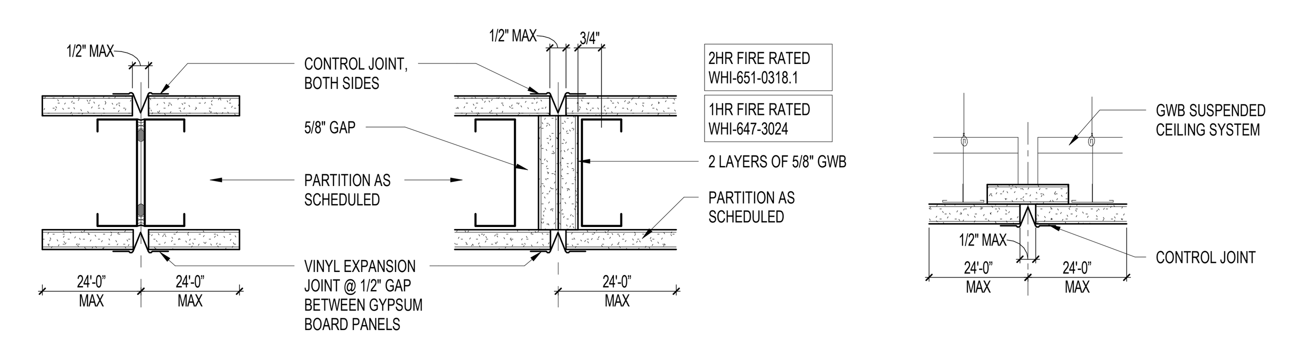

CONTROL JOINT IN NON-RATED PARTITIONS

CONTROL JOINT IN FIRE RATED PARTITIONS

SINGLE LAYER GYPSUM BOARD SHOWN
-DOUBLE LAYER GYPSUM BOARD APPLICATION SIMILAR

CONTROL JOINT IN GYPSUM BOARD CEILING

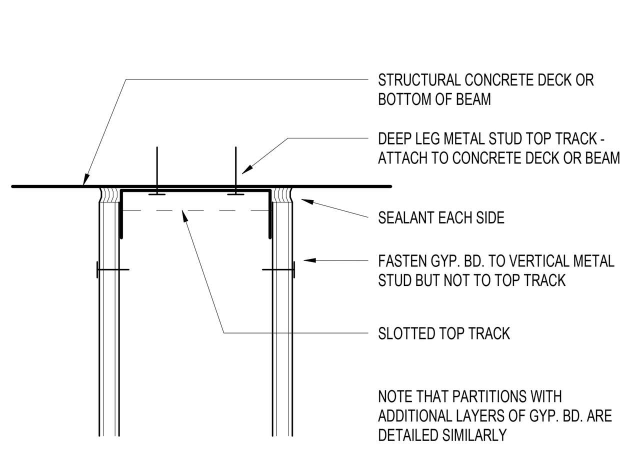

DEFLECTION TRACK
NON RATED PARTITION @ BOTTOM OF CONCRETE DECK OR BEAM

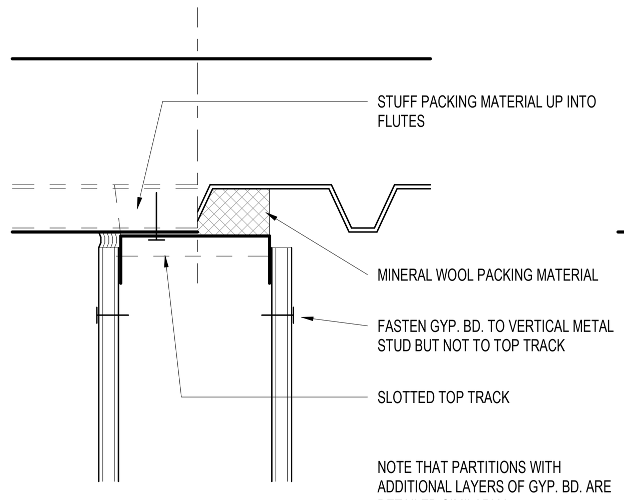

DEFLECTION TRACK
NON RATED PARTITION @ METAL DECK (BOTH PARALLEL / PERPENDICULAR TO FLUTES SHOWN)

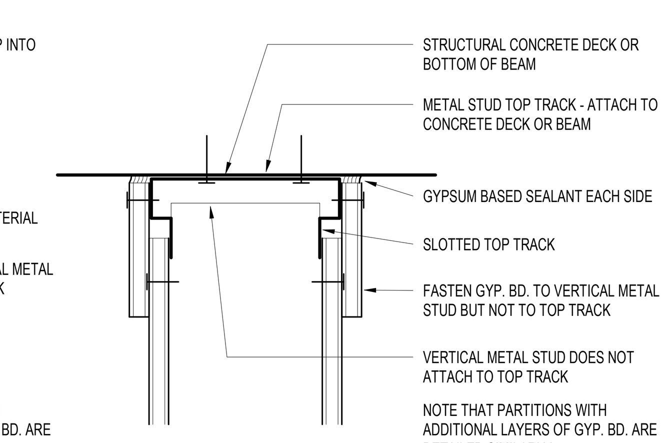

DEFLECTION TRACK
RATED PARTITION @ BOTTOM OF CONCRETE DECK OR BEAM

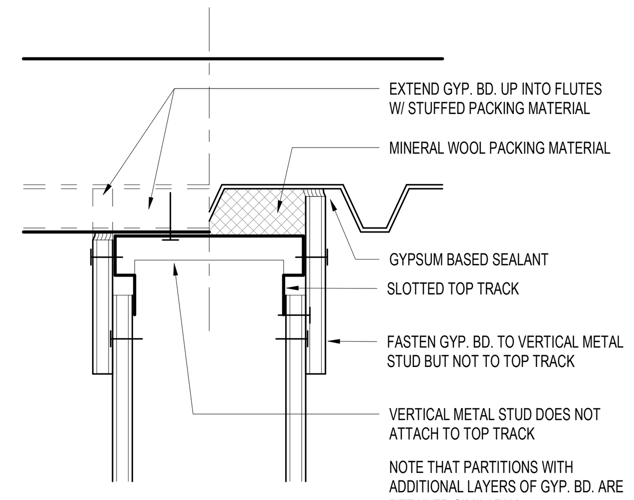

DEFLECTION TRACK
RATED PARTITION @ METAL DECK (BOTH PARALLEL / PERPENDICULAR TO FLUTES SHOWN)

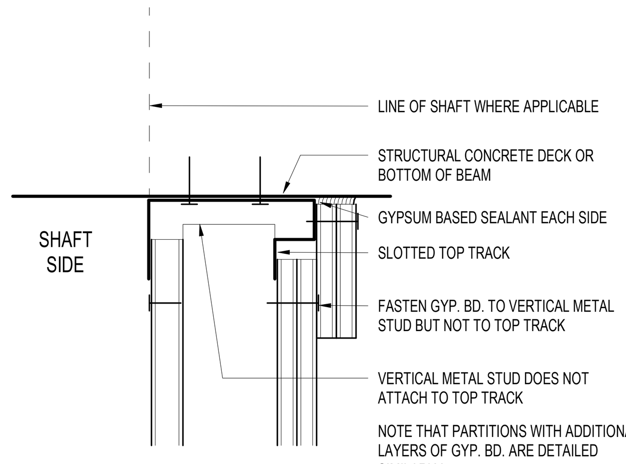

DEFLECTION TRACK
SHAFTWALL PARTITION @ BOTTOM OF CONCRETE DECK OR BEAM

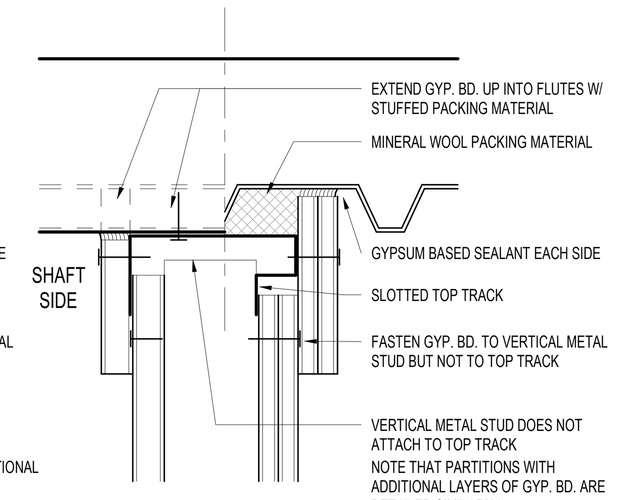

DEFLECTION TRACK
RATED SHAFTWALL PARTITION @ BOTTOM OF METAL DECK OR BEAM

TERMINATE ALL METAL STUD PARTITIONS EXTENDING TO THE STRUCTURAL DECK ABOVE W/ DEFLECTION TRACKS.

RATED DETAILS DRAWN THIS SHEET ARE BASED ONTHE FIRETRAK SYSTEM - www.firetrak.com

ACCEPTABLE SUBSTITUTE: SLIPTRACK SYSTEM BY BRADY INNOVATIONS | CLARK DIETRICH - www.sliptrack.com

PARTITION DEFLECTION

C:\Users\lblguest1\Documents\1025 TCJC_SUB COURT_CENTRAL_MAIN_ggrantV9LGA.rvt

COMM. NO. 1025
DATE 03/04/2021
DRAWN GEG
CHECKED TM

BAR IS ONE INCH IN LENGTH ON ORIGINAL DRAWING CHECK SCALE AND ADJUST ACCORDINGLY
ONE INCH

REVISIONS:
2 07/29/21 ADD #3

LBL ARCHITECTS Listen. Build. Lead.
1106 W. RANDOL MILL ROAD
SUITE 300
ARLINGTON, TEXAS 76012
PHONE (817) 265-1510
FAX (817) 265-1582
WWW.LBLARCHITECTS.COM
TBAE FIRM # BR 1350

TARRANT COUNTY SUBCOURTHOUSE IN ARLINGTON
FINISH-OUT AND RENOVATIONS
700 E. ABRAM STREET, ARLINGTON, TEXAS

STANDARD PARTITION TYPES (METAL STUDS)
4.1

7/28/2021 2:48:55 PM

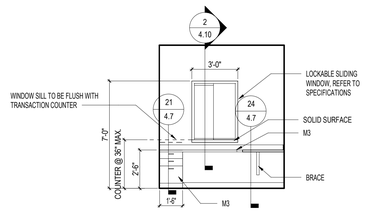

1 RECEPTION - 253 EAST
1/4" = 1'-0"

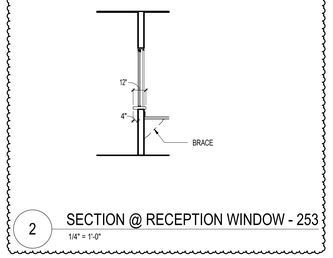

2 SECTION @ RECEPTION WINDOW - 253
1/4" = 1'-0"

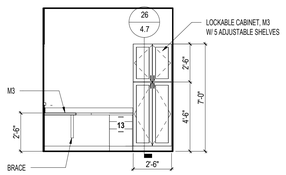

3 RECEPTION - 253 SOUTH
1/4" = 1'-0"

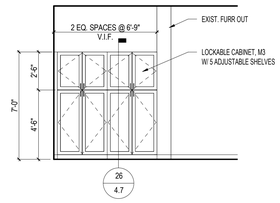

4 MULTI-PURPOSE ROOM - 255
1/4" = 1'-0"

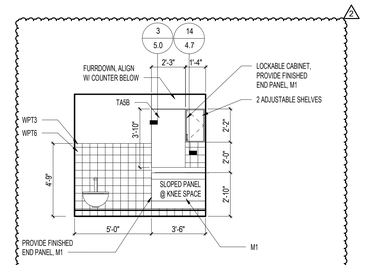

5 RESTROOM - 258
1/4" = 1'-0"

NOTE: WALL TILE WPT3 + WPT6 IS TYPICAL ON ALL WALLS IN RESTROOM

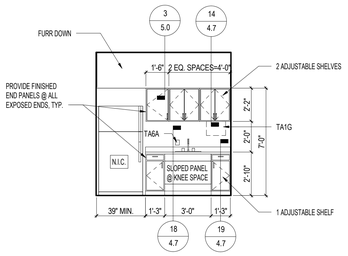

6 COFFEE - 259
1/4" = 1'-0"

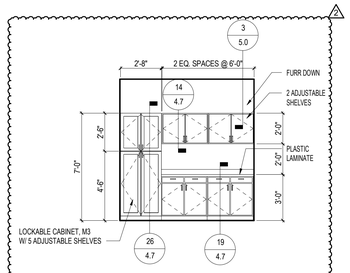

7 WORK ROOM - 252
1/4" = 1'-0"

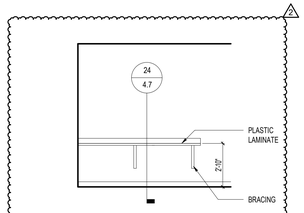

8 BREAK ROOM COUNTER - 304
1/4" = 1'-0"

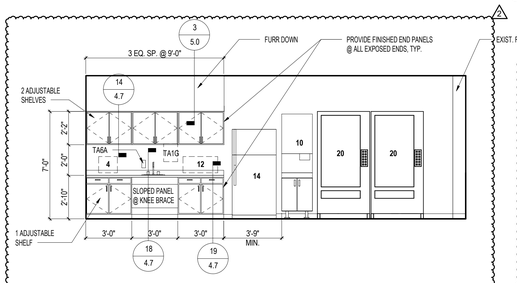

9 BREAK ROOM - 304
1/4" = 1'-0"

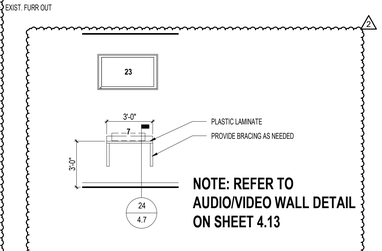

NOTE: REFER TO AUDIO/VIDEO WALL DETAIL ON SHEET 4.13

10 FITNESS ROOM - 303 WEST
1/4" = 1'-0"

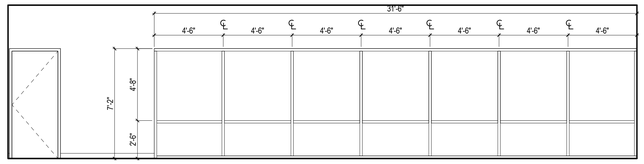

11 FITNESS ROOM - 303 EAST
1/4" = 1'-0"

NOTE: GLAZING IS 1/4" CLEAR TEMPERED

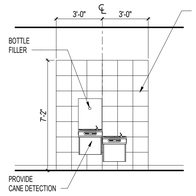

12 EWC W/BOTTLE FILLER @ CORRIDOR - 302
1/4" = 1'-0"

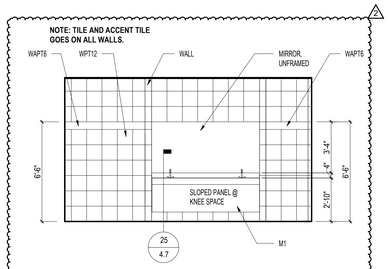

13 WOMEN'S RESTROOM - 301
1/4" = 1'-0"

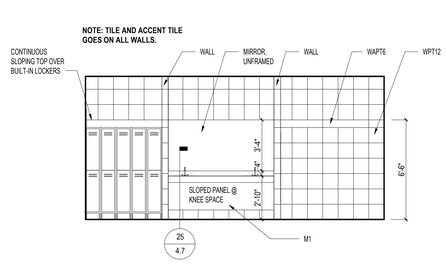

14 MEN'S RESTROOM - 300
1/4" = 1'-0"

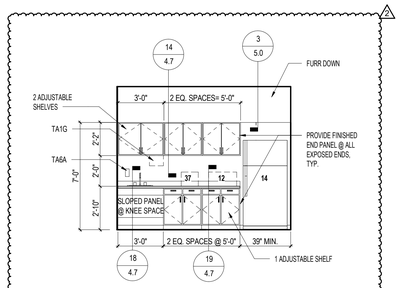

15 COFFEE - 325
1/4" = 1'-0"

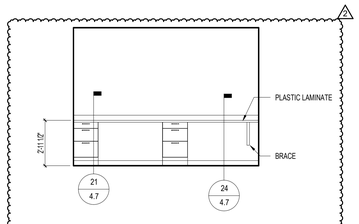

16 INTERNS - 326 SOUTH
1/4" = 1'-0"

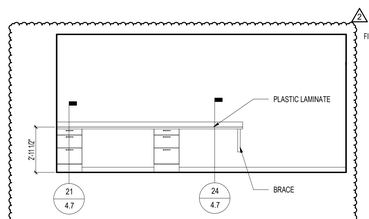

17 INTERNS - 326 NORTH
1/4" = 1'-0"

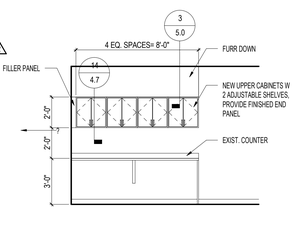

18 WORKROOM - 327
1/4" = 1'-0"

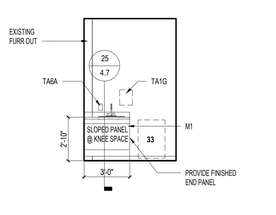

19 MOTHER'S ROOM - 304B
1/4" = 1'-0"

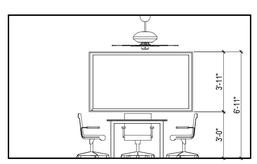

20 CONFERENCE ROOM - 320 MONITOR
1/4" = 1'-0"

NOTE: REFER TO A/V WALL DETAIL @ CONFERENCE 320 ON SHEET 4.13

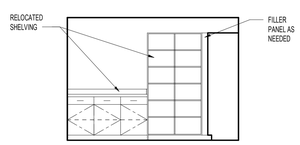

21 STORAGE - 310 NORTH
1/4" = 1'-0"

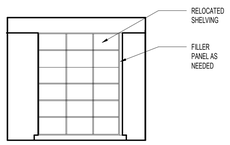

22 STORAGE - 310 EAST
1/4" = 1'-0"

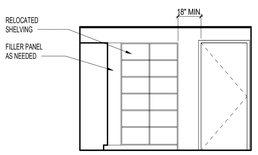

23 STORAGE - 310 SOUTH
1/4" = 1'-0"

ALL CABINETRY IS TAN SOAPSTONE PLASTIC LAMINATE U.N.O.
ALL COUNTERTOPS ARE SOLID SURFACE U.N.O. REFER TO SHEET 4.7 FOR STANDARD DETAILS.

FINISH AND MATERIALS LEGEND
REFER TO SHEET 4.11

FURNITURE, FIXTURES & EQUIPMENT
REFER TO SHEET 9.0

TOILET ACCESSORIES SCHEDULE
REFER TO SHEET 4.13

COMM. NO. 1025
DATE 03/04/2021
DRAWN GEG
CHECKED TM

BAR IS ONE INCH IN LENGTH ON ORIGINAL DRAWING CHECK SCALE AND ADJUST ACCORDINGLY
ONE INCH

REVISIONS:
1 05/21/21 ADD #1
2 07/29/21 ADD #3

REGISTERED ARCHITECT TIMOTHY M. MCCARTY STATE OF TEXAS
As Noted
Add #3
07.29.21

LBL ARCHITECTS Listen. Build. Lead.
1106 W. RANDOL MILL ROAD
SUITE 300
ARLINGTON, TEXAS 76012
PHONE (817) 265-1410
FAX (817) 265-1582
WWW.LBLARCHITECTS.COM
TBAE FIRM # BR 1350

TARRANT COUNTY SUBCOURTHOUSE IN ARLINGTON
FINISH-OUT AND RENOVATIONS
700 E. ABRAM STREET, ARLINGTON, TEXAS

INTERIOR ELEVATIONS
4.10

C:\Users\tlgruen1\Documents\1025 TCJC_SUB COURT_CENTRAL_MAIN_tgruen1fkLGA.rvt
7/28/2021 2:49:59 PM

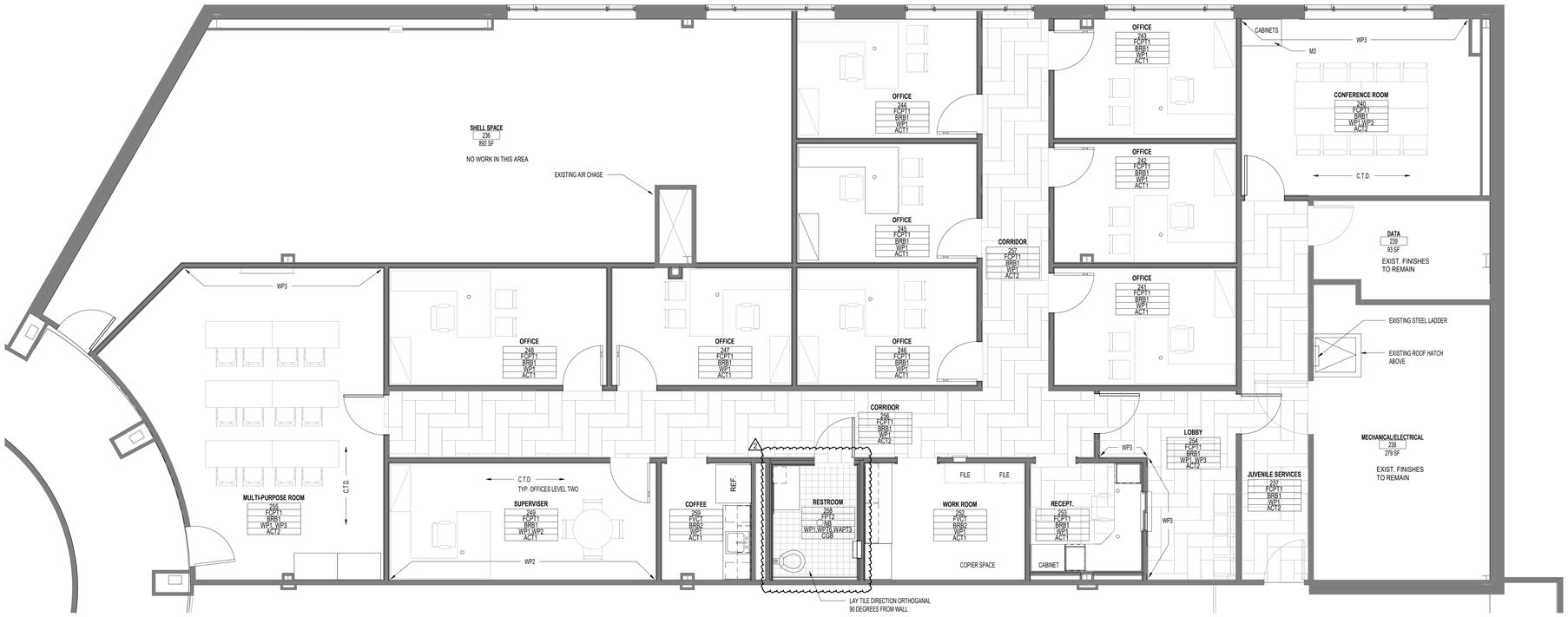

1 FINISH PLAN - SECOND FLOOR

1/4" = 1'-0"

NORTH

FINISH AND MATERIALS LEGEND

FLOOR FINISHES		
• FPT1 -	PORCELAIN TILE-12"X12"	CROSSVILLE, EMPIRE: BLACK SWAN VS86- UNPOLISHED (GROUT- MAPEI 10 BLACK)
• FPT2-	PORCELAIN TILE-6"X6"	CROSSVILLE, BLUESTONE: COLORADO BUFF AV201- UNPOLISHED (GROUT- MAPEI 39 IVORY)
• FVCT-	VINYL COMPOSITE TILE FLOORING	ARMSTRONG, VCT- CHARCOAL 51915
• FCPT1-	CARPET 1	MOHAWK GROUP, ICONIC EARTH: METALMORPHIC- BT388/ QB388 SOLID GROUND METALLIC 955 (12"X36")
• FCPT2-	CARPET 2	MOHAWK GROUP, ART STYLE: METALLIC PATH- BT431/QB431 ECRU GLIMMER 939 (12"X36")
• FCPT3-	CARPET 3	MOHAWK GROUP, ICONIC EARTH: METALMORPHIC- BT388/QB388 RUGGED RANGE METALLIC 152 (12"X36")
• FRT-	RUBBER TILE FLOORING	JOHNSONITE; REPLAY TILE, LINKAGE, 24" X 24" (3/8" THICK) 520 SANDUSKEY
• EXIST-	EXISTING TO REMAIN	
BASE FINISHES		
• BRB1 -	RUBBER BASE- STRAIGHT	ARMSTRONG #12 SHADOW GREY
• BRB2 -	RUBBER BASE- COVED	ARMSTRONG #12 SHADOW GREY
• NB-	NO BASE	
• EXIST-	EXISTING TO REMAIN	
WALL FINISHES		
• WP1 -	PAINTED	SHERWIN WILLIAMS ANTIQUE WHITE SW 6119
• WP2-	PAINTED	SHERWIN WILLIAMS BELEVIABLE BLUFF SW 6120
• WP3-	PAINTED	SHERWIN WILLIAMS CAMELBACK SW 6122
• WPT6 -	PORCELAIN TILE- 6"X6"	CROSSVILLE, BLUESTONE: COLORADO BUFF AV201- UNPOLISHED (GROUT: MAPEI 39 IVORY)
• WPT12-	PORCELAIN TILE- 12"X12"	CROSSVILLE, EMPIRE: PALAIS TAUPE VS81- UNPOLISHED (GROUT: MAPEI 39 IVORY)
• WAPT6-	PORCELAIN TILE ACCENT- 6"X36"	CROSSVILLE, EMPIRE: EMPEROR'S GOLD VS82- UNPOLISHED (GROUT: MAPEI 39 IVORY)
• WAPT3-	PORCELAIN TILE ACCENT- 3"X6"	CROSSVILLE, BLUESTONE: COLORADO BUFF AV201- UNPOLISHED (GROUT: MAPEI 39 IVORY)
• EXIST.-	EXISTING TO REMAIN	
CEILING FINISHES		
• ACT1 -	ACOUSTIC TILE CEILING	ARMSTRONG "CORTEGA" 24" X 24"
• ACT2-	ACOUSTIC TILE CEILING	ARMSTRONG "CIRRUS" 24" X 24"
• GSB -	GYPSUM BOARD CEILING PAINTED	SHERWIN WILLIAMS SNOWBOUND SW7004
• EXIST-	EXISTING CEILING TO REMAIN	
INTERIOR FINISHES		
•	TOILET PARTITIONS	PLASTIC LAMINATE - WILSONART 4843-60 MISTED ZEPHYR
•	M1-MILLWORK	WILSONART 4843-60 MISTED ZEPHYR
•	M2-MILLWORK	WILSONART 4887-30 TAN SOAPSTONE
•	M3-MILLWORK	WILSONART 7934K BILTMORE CHERRY
•	WP5-DOOR FRAMES	SHERWIN WILLIAMS CITYSCAPE SW7067
•	SOLID SURFACE	CORIAN - LAVAROCK
VERTICLE ROLL- UP BLINDS		MECHO - THERMOVEIL DENSE VERTICAL WEAVE, 1003 GREY (2-3% OPEN)
SHOWER FINISH		BESTBATH MOLTON STONE ECRU
SPECIALTY WALL FINISH		WALLTALKERS MAGRITE M2PR - LOCATED ON FLOOR PLANS
CORNER GUARDS		PAWLING - #555 PORCELAIN

FINISH NOTES

TILE WATERPROOFING SYSTEM
PORCELAIN TILE FLOORS
- UNCOUPLING MEMBRANE - PROVIDE BELOW TILE FLOORS EXCEPT WITHIN SHOWER COMPARTMENTS.
- WATERPROOFING MEMBRANE - PROVIDE AT TILE SHOWER FLOORS.

PORCELAIN TILE BASE / WALLS
- WATERPROOF BUILDING PANELS - PROVIDE AT TILE WALLS (FULL HEIGHT), INCLUDING WITHIN SHOWER COMPARTMENTS.

C.T.D.

CARPET TILE DIRECTION - (BRICK ASHLAR) HERRINGBONE LAYOUT SHOWN OR NOTED ON FINISH PLANS

ALL CABINETRY IS TAN SOAPSTONE PLASTIC LAMINATE U.N.O.
ALL COUNTERTOPS ARE SOLID SURFACE U.N.O. REFER TO SHEET 4.7 FOR STANDARD DETAILS.

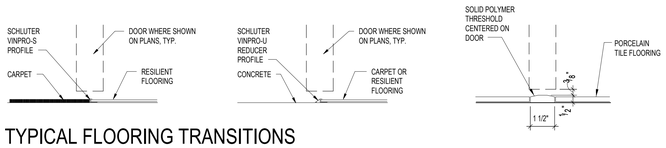

TYPICAL FLOORING TRANSITIONS

C:\Users\fdguest1\Documents\1025 TCJC_SUB COURT_CENTRAL_MAIN_jgrant\R&GA.rvt

COMM. NO. 1025
DATE 03/04/2021
DRAWN GEG
CHECKED TM

BAR IS ONE INCH IN LENGTH ON ORIGINAL DRAWING CHECK SCALE AND ADJUST ACCORDINGLY

ONE INCH

REVISIONS:
2 07/29/21 ADD #3

REGISTERED ARCHITECT
TIMOTHY M. MCCARTY
STATE OF TEXAS
29899
07/29/21
As noted
Add #3

LBL ARCHITECTS
Listen. Build. Lead.
1106 W. RANDOL MILL ROAD
SUITE 300
ARLINGTON, TEXAS 76012
PHONE (817) 265-1150
FAX (817) 265-1552
WWW.LBLARCHITECTS.COM
TBAE FIRM # BR 1850

TARRANT COUNTY SUBCOURTHOUSE IN ARLINGTON

FINISH-OUT AND RENOVATIONS

700 E. ABRAM STREET, ARLINGTON, TEXAS

FINISH PLAN - SECOND FLOOR

4.11

7/29/2021 2:49:01 PM

1 FINISH PLAN - THIRD FLOOR
1/4" = 1'-0"

FINISH AND MATERIALS LEGEND

REFER TO SHEET 4.11

COMM. NO.	1025
DATE	03/04/2021
DRAWN	GEG
CHECKED	TM

BAR IS ONE INCH IN LENGTH ON ORIGINAL DRAWING CHECK SCALE AND ADJUST ACCORDINGLY

ONE INCH

REVISIONS:
2 07/29/21 ADD #3

REGISTERED ARCHITECT STATE OF TEXAS
Art Exam Add #3
07-29-21

LBL ARCHITECTS
Listen. Build. Lead.
1106 W. RANDOL MILL ROAD
SUITE 300
ARLINGTON, TEXAS 76012
PHONE (817) 265-1510
FAX (817) 265-1582
WWW.LBLARCHITECTS.COM
TBAE FIRM # BR 1350

TARRANT COUNTY SUBCOURTHOUSE IN ARLINGTON

FINISH-OUT AND RENOVATIONS

700 E. ABRAM STREET, ARLINGTON, TEXAS

FINISH PLAN - THIRD FLOOR

4.12

7/28/2021 2:49:04 PM

C:\Users\tbiguest1\Documents\1025 TCJC_SUB COURT_CENTRAL_MAIN_ggrant\19LGA.rvt

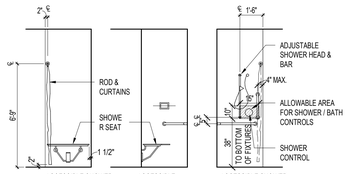

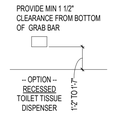

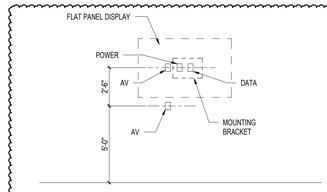

AUDIO/VISUAL WALL DETAIL @ TYPICAL MONITORS

NOTE: PLEASE COORDINATE OUTLET HEIGHTS WITH HEIGHTS ON SHEET E2.1 AND E2.2. ENSURE THERE ARE NO EXPOSED CORDS RUNNING UP THE WALL

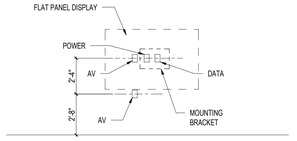

AUDIO/VISUAL WALL DETAIL @ CONFERENCE 320

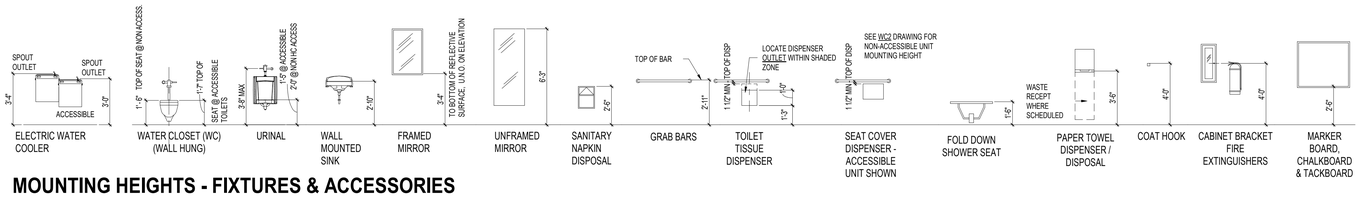

MOUNTING HEIGHTS - FIXTURES & ACCESSORIES

NOTE THAT PLUMBING FIXTURES SHOWN ABOVE ARE "GENERIC" FOR MOUNTING HEIGHTS. REFER TO PLUMBING SCHEDULE FOR ACTUAL FIXTURE TYPES AND SIZES.

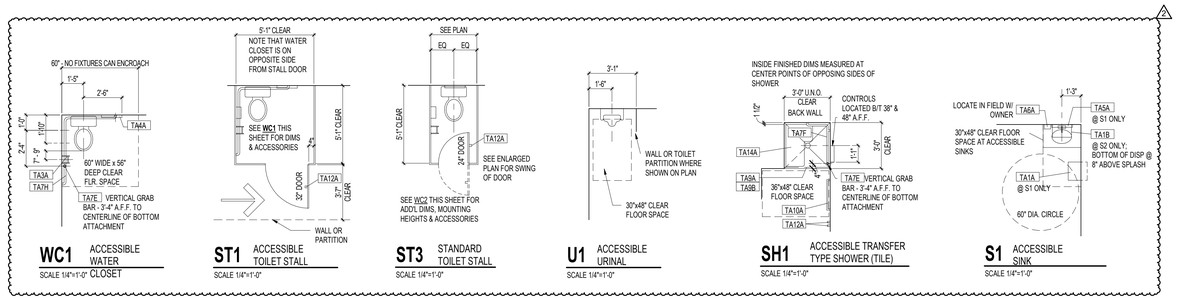

ENLARGED PLANS - TOILET / RESTROOM FIXTURES W/ ACCESSORIES & CLEARANCES

NOTE THAT PLUMBING FIXTURES SHOWN ABOVE ARE "GENERIC" FOR ILLUSTRATING LOCATIONS & CLEARANCES. REFER TO PLUMBING SCHEDULE FOR ACTUAL FIXTURE TYPES AND SIZES.

TOILET ACCESSORIES SCHEDULE - ALL TOILET ACCESSORIES FURNISHED AND INSTALLED BY CONTRACTOR

	PAPER TOWEL DISPENSER & WASTE RECEPTACLES			
TA1A	SEMI-RECESSED COMBO TOWEL / WASTE RECEPTACLE	BRADLEY	2271-10	18 GAL WASTE CAPACITY
TA1G	BLUE UTLTRA 9" MINI PAPER TOWL DISPENSER (COFFEE BAR)	GP	54518	
	TOILET PAPER TISSUE DISPENSER			
TA3A	9" JUMBO	GP	59209	
	TOILET SEAT COVER DISPENSER			
TA4A	TOILET SEAT COVER	GP	57748	
	MIRRORS			
TA5A	24 x 36 CHANNEL FRAMED	BOBRICK	B-165	
TA5B	UNFRAMED	SEE SPECS		SIZES INDICATED ON PLANS AND/OR ELEVATIONS
	SOAP DISPENSERS			
TA6A	PRO ENMOTION	GP	52053	
TA6B	LAVATORY MOUNTED SOAP DISPENSER	BOBRICK	B-822	
	GRAB BARS NOTE: FOR ALL GRAB BARS ON TOILET PARTITIONS - USE BOBRICK 258 SERIES ANCHORS, ONE ANCHOR PER FLANGE			
TA7E	18" LONG	BOBRICK	B-6806X18	MOUNT VERTICALLY ON WALL
TA7F	HORIZONTAL TWO WALL SHOWER BAR	BOBRICK	B-6861	
TA7G	HORIZONTAL TWO WALL SHOWER BAR	BOBRICK	B-68616	
TA7H	HORIZONTAL TWO WALL GRAB BAR	BOBRICK	B-6897	
	SHOWER CURTAIN RODS			
TA9A	SS ROD	BOBRICK	B-6047	W/ #204-1 SS HOOKS - QTY AS REQUIRED
	SHOWER CURTAINS			
TA9B	OPAQUE, MATTE WHITE VINYL	BOBRICK	204-2	
	TOWEL BARS			
TA10A	24" LONG	BOBRICK	B-530	
	HOOKS - ROBE, TOWEL, & IV			
TA12A	ROBE HOOK	BOBRICK	B-76717	
	SHOWER SEATS			
TA14A	FOLDING SEAT - PHENOLIC (L - SHAPED)	BOBRICK	B-5181	NOTE: MAX WEIGHT ON SEAT IS 360 LBS

TOILET ROOM & ACCESSORY NOTES

1. ENLARGED PLANS INDICATE DIMENSIONS, TOILET ACCESSORY LOCATIONS, AND REQUIRED CLEARANCES TO BE MAINTAINED.
2. ENLARGED TOILET ROOM & COMPONENT LAYOUTS (S1, S2, U1, WC1, ST2, ETC.) ARE KEYED ONTO FLOOR PLANS.
3. REFER TO FLOOR PLAN SHEETS FOR EXACT TOILET ROOM AND / OR FIXTURE ORIENTATION, DOOR LOCATION(S), ADJACENT WALL CONSTRUCTION, AND ADDITIONAL EQUIPMENT ITEMS.
4. DIMENSIONS INDICATED HERE ARE TYPICAL - UNLESS DIMENSIONED OTHERWISE ON FLOOR PLAN SHEETS OR INTERIOR ELEVATIONS.
5. DIMENSIONS SHOWN FOR TOILET FIXTURES, ACCESSORIES, AND EQUIPMENT ITEMS AS WELL AS REQUIRED CLEAR FLOOR SPACE ARE **FROM FACE OF ROOM FINISH** (SUCH AS TILE).
6. NOTE THAT DOORS CANNOT INFRINGE UPON OR SWING INTO THE REQUIRED RECTANGULAR "CLEAR FLOOR SPACE" AREAS SHOWN ON ENLARGED PLANS.
7. PLUMBING FIXTURES SHOWN HERE ARE **GENERIC** - SEE PLUMBING DRAWINGS FOR ACTUAL SCHEDULED FIXTURES.
8. TOILET STALLS - NOTE THAT DOOR SIZE SHOWN INDICATED CLEAR OPENING REQUIRED. EXAMPLE: 32" DEEP - PROVIDE 32" CLEAR OPENING.

EXAMPLE: PLUMBING FIXTURE ACCESSORY TYPE

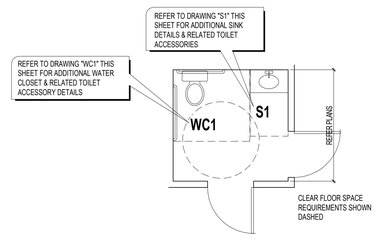

COMM. NO. 1025
DATE 03/04/2021
DRAWN GEG
CHECKED TM

BAR IS ONE INCH IN LENGTH ON ORIGINAL DRAWING CHECK SCALE AND ADJUST ACCORDINGLY

ONE INCH

REVISIONS:
2 07/29/21 ADD #3

LICENSED ARCHITECT STATE OF TEXAS 23006 — 07.29.21

LBL ARCHITECTS
Listen. Build. Lead.
1190 W. PANDOL MILL ROAD
SUITE 300
ARLINGTON, TEXAS 76012
PHONE (817) 265-1450
FAX (817) 265-1582
WWW.LBLARCHITECTS.COM
TBAE FIRM # BR 1350

TARRANT COUNTY SUBCOURTHOUSE IN ARLINGTON

FINISH-OUT AND RENOVATIONS

700 E. ABRAM STREET, ARLINGTON, TEXAS

ENLARGED PLANS / ACCESSORIES/ MTG. HEIGHTS

4.13

7/8/2021 2:49:05 PM

C:\Users\tbiguet1\Documents\1025 TCJC_SUB COURT_CENTRAL_MAIN_gtgrant\RLGA.rvt

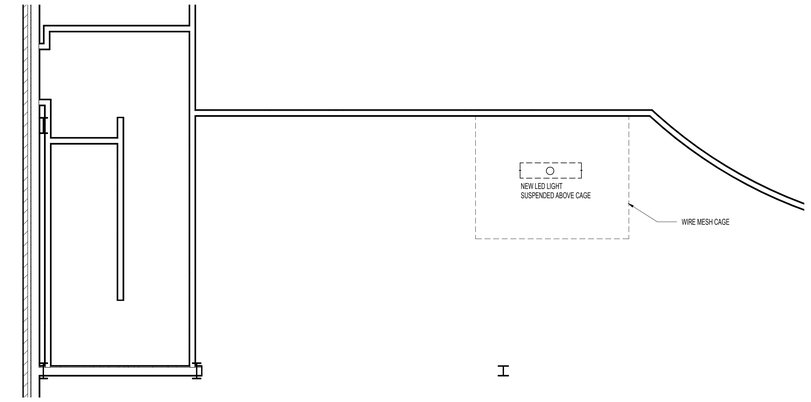

4 REFLECTED CEILING PLAN - EQUIPMENT STORAGE 332B
1/4" = 1'-0"

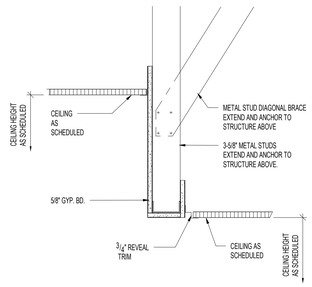

2 DETAIL @ FURR DOWN

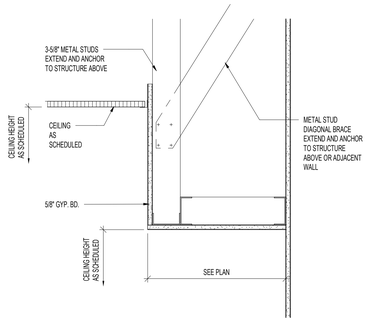

3 DETAIL @ FURR DOWN

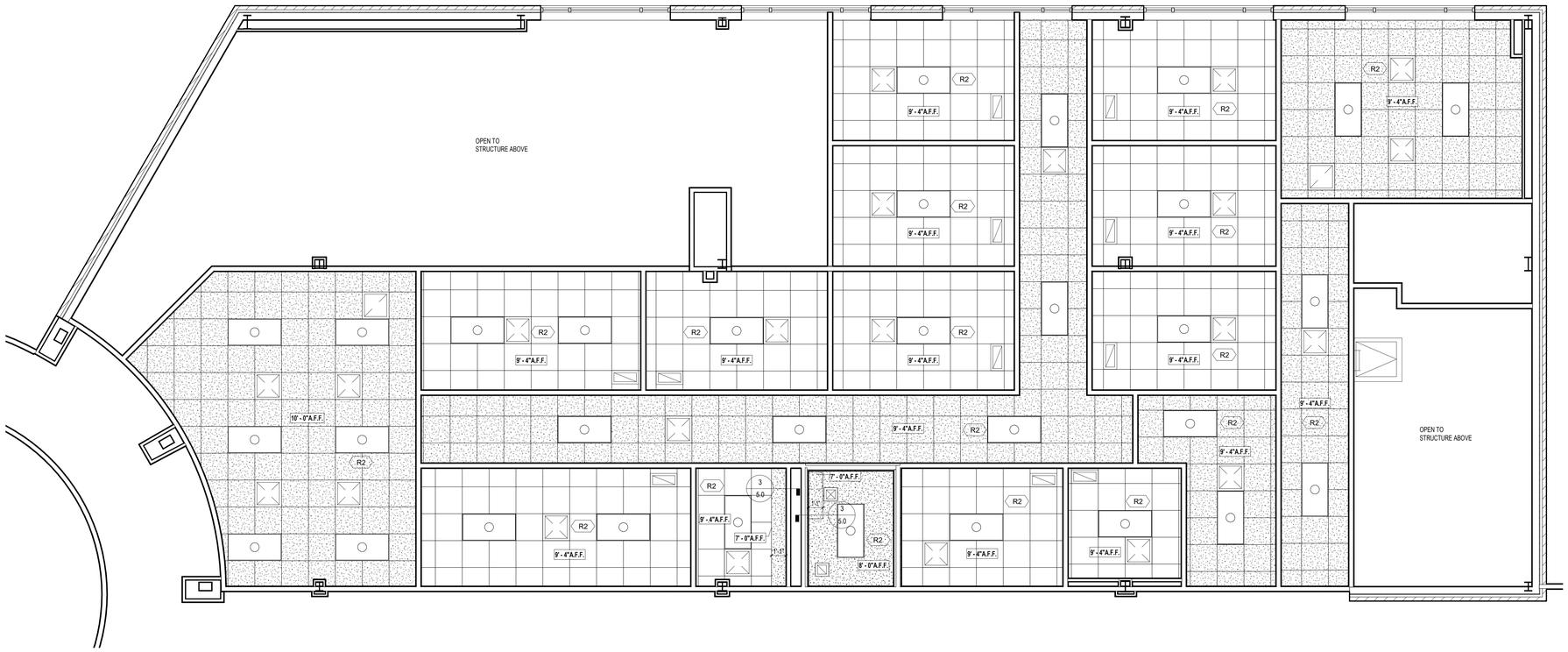

1 REFLECTED CEILING PLAN - SECOND FLOOR
1/4" = 1'-0"

NORTH

RCP PLAN NOTES BY NUMBER

- R1 RECESSED LED CAN LIGHTS, DIMMABLE
- R2 NEW ACOUSTICAL PANEL CEILING (SUSPENSION SYSTEM AND ACOUSTICAL UNITS) AND LED LIGHTS IN THIS ROOM OR TO THE EXTENTS IDENTIFIED ON PLAN.
- R3 EXISTING HARD CEILING TO REMAIN; PAINT.
- R4 INSTALL NEW CEILING FAN AS CHOSEN BY OWNER. EXISTING CEILING FANS ARE TO BE REMOVED AND PROVIDED TO OWNER.
- R5 NOT USED.

RCP FINISH LEGEND

* NOTE: PLEASE REFER TO ROOM FINISH SCHEDULE FOR ADDITIONAL ROOM NOTES.

REFLECTED CEILING PLAN NOTES:

A. DRAWINGS & SPECIFICATIONS ARE COMPLIMENTARY COMPONENTS OF THE CONTRACT DOCUMENTS. REVIEW ALL DRAWINGS AND SPECIFICATIONS FOR THE COMPLETE SCOPE OF WORK. NOTIFY ARCHITECT IMMEDIATELY FOR CLARIFICATION IF INCONSISTENCIES, CONTRADICTIONS OR OMISSIONS ARE DISCOVERED.
B. DO NOT SCALE DRAWINGS, IF DIMENSIONAL INFORMATION IS REQUIRED & NOT FOUND, NOTIFY ARCHITECT IMMEDIATELY FOR CLARIFICATION.
C. ALL DIMENSIONS ARE TO COLUMN CENTERLINES, CENTER OF SUSPENDED CEILING GRIDS OR FACE OF FINISHED WALLS/SOFFITS UNLESS NOTED OTHERWISE.
D. ALL GWB SOFFITS AND BULKHEADS ARE TO BE 2 INCHES BELOW ADJACENT SUSPENDED CEILING SYSTEMS, UNLESS NOTED OTHERWISE.
E. FINISHED CEILING HEIGHT IS 9'-0" UNLESS NOTED OTHERWISE.
F. SUSPENDED CEILING TILES IN EACH ROOM ARE TO BE CONFIGURED SUCH THAT NO LESS THAN ONE-HALF A BORDER TILE EXISTS ADJACENT TO ANY ROOM WALL, UNLESS NOTED OTHERWISE.
G. CEILINGS IN ELECTRICAL ROOMS, TELEPHONE ROOMS, MECHANICAL ROOMS & OTHER SIMILAR SPACES ARE EXPOSED TO STRUCTURE ABOVE UNLESS NOTED OR SCHEDULED OTHERWISE.
H. REFER TO ELECTRICAL DRAWINGS FOR ADDITIONAL LIGHT FIXTURE SPECIFIC INFORMATION.
I. REFER TO MECHANICAL DRAWINGS FOR ADDITIONAL DIFFUSER SPECIFIC INFORMATION.
J. SUSPENDED CEILING GRIDS ARE LAID OUT WITH EITHER A TILE OR A GRID AT THE CENTER OF THE ROOM IN EACH DIRECTION UNLESS NOTED OR DIMENSIONED OTHERWISE.

GENERAL ACOUSTICAL NOTES

SEE FLOOR PLAN FOR ROOMS REQUIRING SOUND ATTENUATION.

REFLECTED CEILING PLAN LEGEND

CEILINGS

- ACOUSTICAL TILE CEILING 1 (24X24)
- ACOUSTICAL TILE CEILING 2 (24X24)
- NO CEILING
- GYPSUM CEILING - PAINT, IF EXPOSED

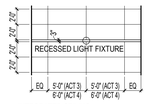

INTEGRATED CEILING ASSEMBLY(SPECIALTY SIZE)

LIGHTS (REFER E-SHEETS FOR SIZES)

- 2x2 RECESSED LIGHT FIXTURE
- OR
- DOWNLIGHT
- FLUORESCENT LIGHT FIXTURE
- SUSPENDED STRIP LIGHT FIXTURE
- 2x4 RECESSED LIGHT FIXTURE
- SUSPENDED STRIP LIGHT FIXTURE
- WALL MOUNTED LIGHT FIXTURE
- WALL MOUNTED LIGHT FIXTURE

MECHANICAL (REFER M-SHEETS FOR SIZES)

- HVAC SUPPLY DIFFUSER
- HVAC EXHAUST GRILLE
- HVAC RETURN DIFFUSER
- ACCESS PANEL
- HVAC SLOT DIFFUSER

MISCELLANEOUS

- SD SMOKE DETECTOR
- S SPEAKER
- EXIT LIGHT REFER TO ELECTRICAL

COMM. NO. 1025
DATE 03/04/2021
DRAWN GEG
CHECKED TM

BAR IS ONE INCH IN LENGTH ON ORIGINAL DRAWING CHECK SCALE AND ADJUST ACCORDINGLY
ONE INCH

REVISIONS:
2 07/29/21 ADD #3

REGISTERED ARCHITECT THOMAS R. MCCARTY 24990 STATE OF TEXAS
07.29.21
As noted Add #3

LBL ARCHITECTS Listen. Build. Lead.
1106 W. RANDOL MILL ROAD
SUITE 300
ARLINGTON, TEXAS 76012
PHONE (817) 265-1582
FAX (817) 265-1592
WWW.LBLARCHITECTS.COM
TBAE FIRM # BR 1350

TARRANT COUNTY SUBCOURTHOUSE IN ARLINGTON
FINISH-OUT AND RENOVATIONS
700 E. ABRAM STREET, ARLINGTON, TEXAS

REFLECTED CEILING PLAN - SECOND FLOOR
5.0

C:\Users\tbigsest\Documents\1025 TC-IC_SUB COURT_CENTRAL_MAIN_gganWXjLGA.rvt
7/29/2021 2:45:07 PM

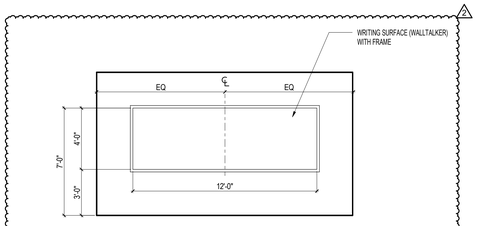

3 WRITING SURFACE MOUNTING HEIGHT

NOTE: COORDINATE LOCATIONS WITH DRAWINGS.

FURNITURE, FIXTURES & EQUIPMENT

	NUMBER	EQUIPMENT NAME	BY OWNER	BY CONTRACTOR
	1	CHAIR - STACKING	●	
	2	CHAIR - GUEST	●	
	3	CHAIR - TASK	●	
	4	COFFEE MAKER 'A'		●
	5	COPY MACHINE	●	
	6	DESK AND RETURNS	●	
	7	DVD PLAYER		●
	8	EXERCISE MACHINE - POWERED	●	
	9	GLASS BOARD - 4x4, COORD. LOCATION & COLOR W/ OWNER		●
	10	ICE MAKER		●
2	** 11	SEMI-RECESSED AUTOMATED EXTERNAL DEFIBRILLATOR	●	●
	12	MICROWAVE		●
1	13	MOBILE PEDESTAL 15" X 28" X 22" B/B/F	●	
	*** 14	REFRIGERATOR		●
	15	CONFERENCE CHAIR	●	
	16	STORAGE CABINET - 36" X 7'	●	
	17	STORAGE FILE - LATERAL	●	
	18	SHELVING BOOK - 18" X 42" X 7'	●	
	19	TABLE ROUND - 36"	●	
	20	VENDING MACHINE	●	
	21	FLIP TOP TABLE TRAINING - 24" X 60"	●	
	22	TV MONITOR - 65", COORD. LOCATION W/ OWNER		●
	23	TV MONITOR - 50"		●
	24	EXERCISE MACHINE - NO POWER	●	
	25	MIRROR - 4" A.F.F. TO 7'-0" HIGH		●
	26	INTERACTIVE MONITOR 84", COORD. LOCATION W/ OWNER OPTOMA CREATIVE TOUCH INTERACTIVE FLAT PANEL		●
	* 27	WALL MOUNT OSCILLATING FAN.		●
	28	MIRROR 30"W X 60" H @ 4" A.F.F.		●
	29	GLASS BOARD 5'W X 4'H, COORD. LOCATION & COLOR W/OWNER		●
	30	MAYLINE TECHWORKS COMPUTER BENCH	●	
	31	SWIVEL ROCKER	●	
	33	MINI REFRIGERATOR		●
	34	BAR STOOL	●	
	35	WORK STOOL	●	
2	36	WALLTALKERS MAGRITE M2PR - SEE 3/9.0		●
	37	COFFEE MAKER 'B'		●

NOTE: REFER TO A/V WALL DETAIL SHEET 4.13

*** WALL MOUNT OSCILLATING FAN: PROVIDE AIR KING 99539 OSCILLATING FAN, 24" 1/4 HP. MOUNT 9'-6" CLR FROM FLOOR TO TOP OF FIXTURE. COORDINATE EXACT LOCATION IN FIELD WITH ARCHITECT. PROVIDE 3/4" THICK PLASTIC LAMINATE CLAD MOUNTING BOARD FOR EACH FAN. BOARD SHALL BE ATTACHED TO A MINIMUM OF 2 MTL STUDS AND 39" MIN. TALL. ATTACH FAN MOUNTING BRACKET TO MOUNTING BOARD WITH THROUGH BOLTS AND ATTACH SECONDARY SUPPORT CABLE TO 1" DIA EYE HOOK AT TOP OF BOARD. EACH FAN SHALL HAVE A DUPLEX OUTLET WITHIN 12" OF FAN WITH ON/OFF SWITCH TO OUTLET LOCATED 48" AFF MAX.**

**** PROVIDED BY OWNER/ INSTALLED BY CONTRACTOR**

***** ICE MAKER TO BE PROVIDED IN NO.14 REFRIGERATOR AT COFFEE 325 ONLY**

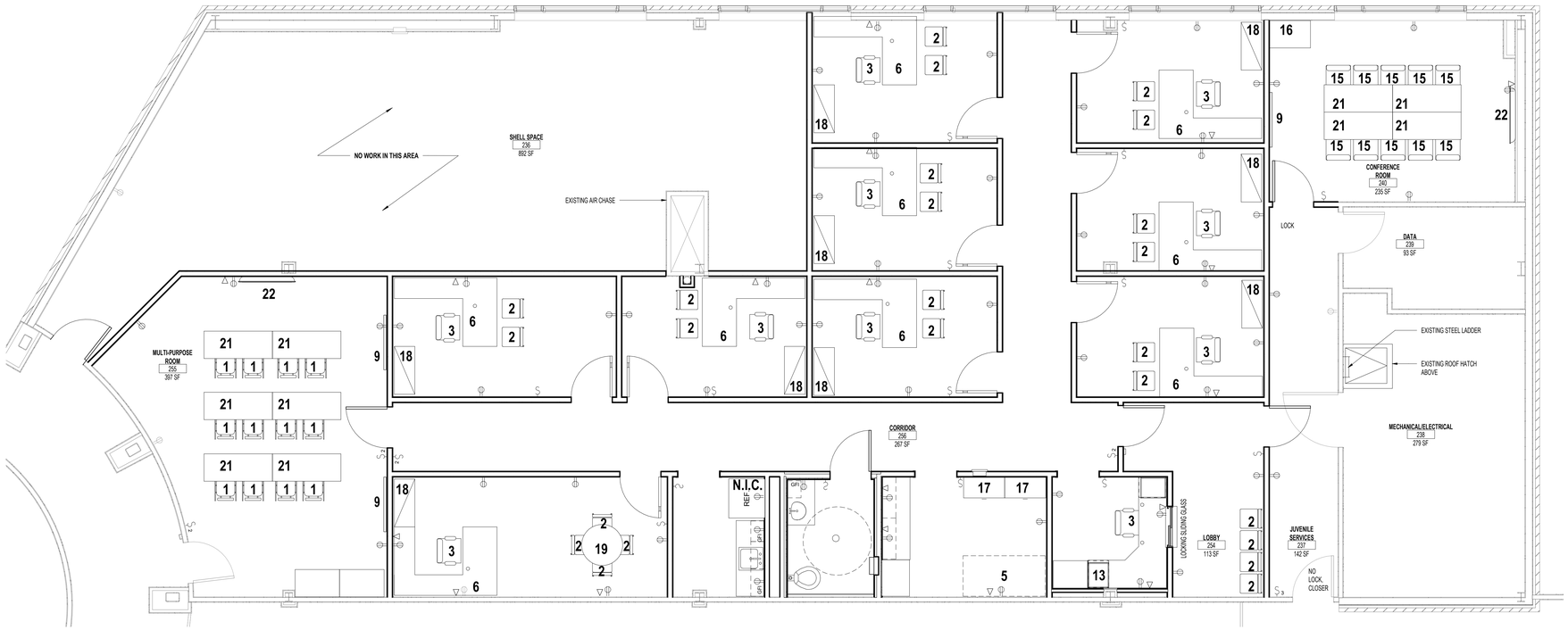

1 FURNITURE, FIXTURE & EQUIPMENT PLAN - SECOND FLOOR

1/4" = 1'-0"

C:\Users\fbgaskill\Documents\1025 TCJC_SUB.COURT_CENTRAL_MAIN_jgramVBLGA.rvt

COMM. NO. 1025
DATE 03/04/2021
DRAWN GEG
CHECKED TM

BAR IS ONE INCH IN LENGTH ON ORIGINAL DRAWING CHECK SCALE AND ADJUST ACCORDINGLY

ONE INCH

REVISIONS:
2 07/29/21 ADD #3

LBL ARCHITECTS Listen. Build. Lead
1190 W. PANDOL MILL ROAD
SUITE 330
ARLINGTON, TEXAS 76012
PHONE (817) 265-1493
FAX (817) 265-1582
WWW.LBLARCHITECTS.COM
TBAE FIRM # BR 1350

TARRANT COUNTY SUBCOURTHOUSE IN ARLINGTON

FINISH-OUT AND RENOVATIONS

700 E. ABRAM STREET, ARLINGTON, TEXAS

FURN., FIXTURE & EQUIP. PLAN - SECOND FLOOR

9.0

7/29/2021 2:49:08 PM

FURNITURE, FIXTURES & EQUIPMENT

REFER TO SHEET 9.0

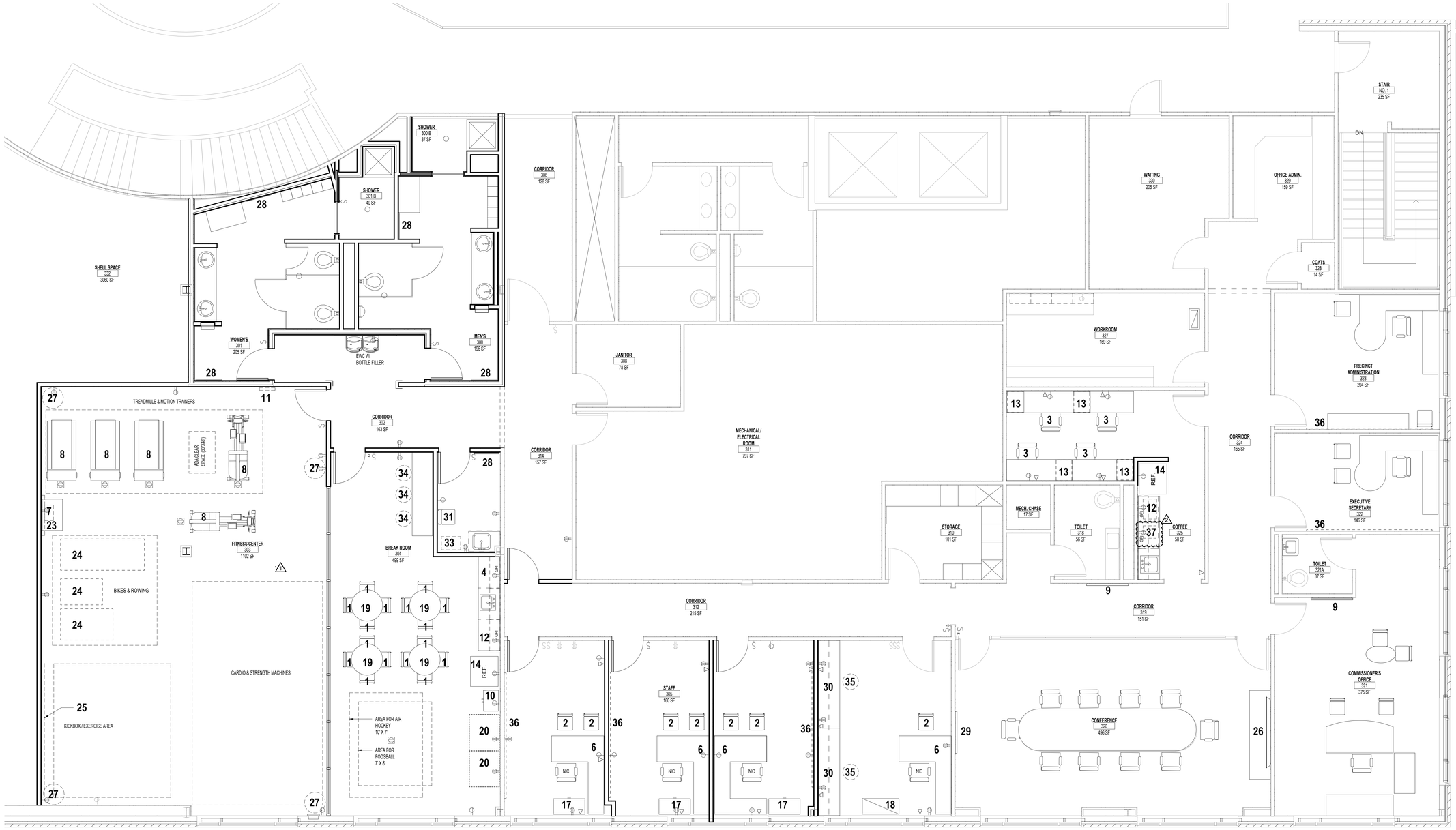

1 FURNITURE, FIXTURE & EQUIPMENT PLAN - THIRD FLOOR

1/4" = 1'-0"

NORTH

COMM. NO.	1025
DATE	03/04/2021
DRAWN	GEG
CHECKED	TM

BAR IS ONE INCH IN LENGTH ON ORIGINAL DRAWING CHECK SCALE AND ADJUST ACCORDINGLY

ONE INCH

REVISIONS:

1	05/21/21	ADD #1
2	07/29/21	ADD #3

REGISTERED ARCHITECT TIMOTHY K. MCCARTY 24990 STATE OF TEXAS

As Noted Add #3 07.29.21

LBL ARCHITECTS Listen. Build. Lead.

1106 W. RANDOL MILL ROAD
SUITE 300
ARLINGTON, TEXAS 76012
PHONE (817) 265-1550
FAX (817) 265-1580
WWW.LBLARCHITECTS.COM
TBAE FIRM # BR 1350

TARRANT COUNTY SUBCOURTHOUSE IN ARLINGTON

FINISH-OUT AND RENOVATIONS

700 E. ABRAM STREET, ARLINGTON, TEXAS

FURN., FIXTURE & EQUIP. PLAN - THIRD FLOOR

9.1

C:\Users\tbfguest1\Documents\1025 TC-JC_SUB COURT_CENTRAL_MAIN_tgrant\VA.GA.rvt

7/29/2021 2:49:10 PM

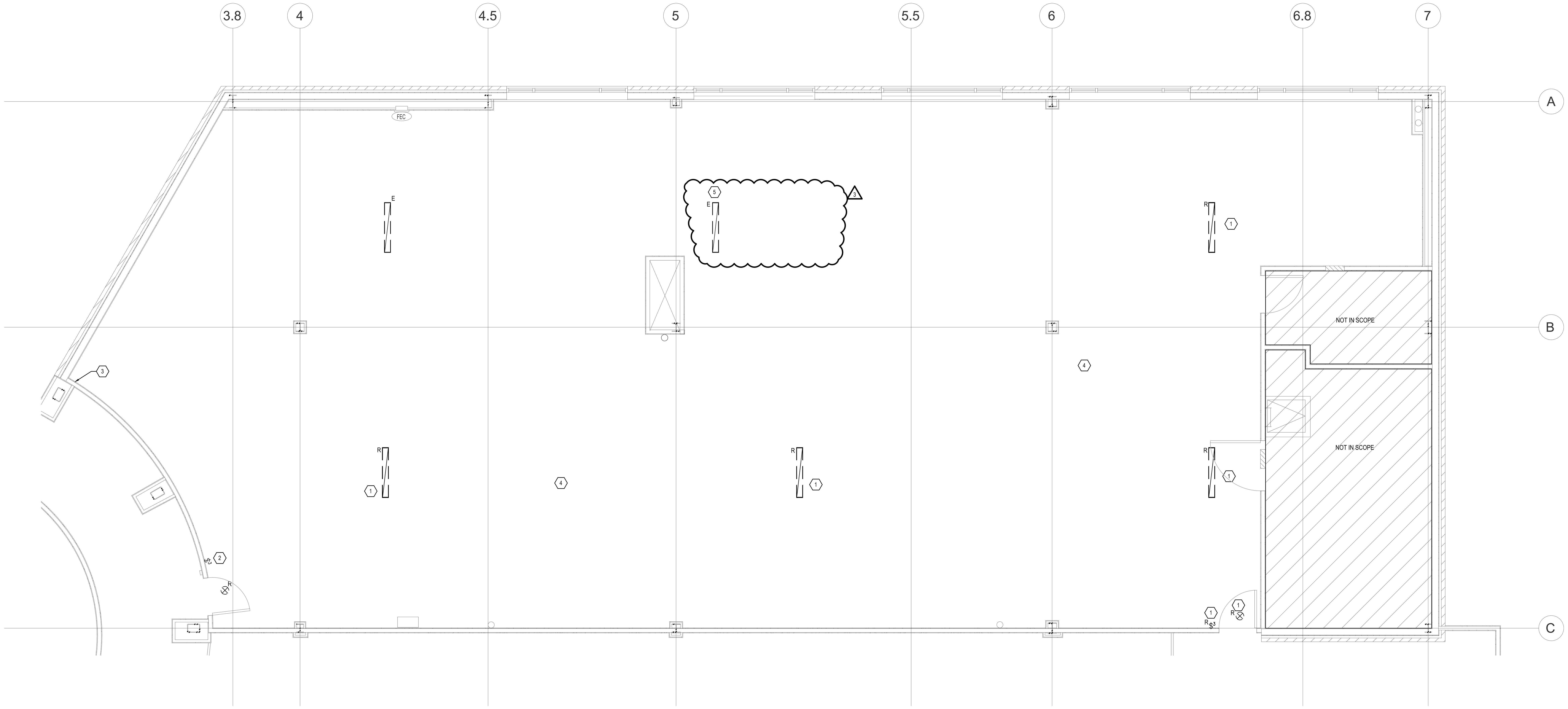

1 SECOND FLOOR PLAN - DEMOLITION LIGHTING
1/4" = 1'-0"

NORTH

NOTES BY SYMBOL "⬡"

1. REMOVE LIGHTS OR LIGHTING DEVICE AND RETURN TO OWNER. REMOVE WIRING AND CONDUIT BACK TO SOURCE.
2. RELOCATE EXISTING SWITCH TO AREA IDENTIFIED BY NOTE BY SYMBOL #3.
3. NEW LOCATION OF EXISTING SWITCH. EXTEND EXISTING CIRCUIT AND RECONNECT.
4. REFER TO FIRE ALARM SHOP DRAWINGS FOR RELOCATED AND NEW FIRE ALARM DEVICES. REFER TO GENERAL NOTES, SHEET E2.1 FOR ADDITIONAL INFORMATION.
5. RELOCATE EXISTING LIGHT FIXTURE TO AREA SHOWN. WIRE TO EXISTING LOCAL SHELL SPACE LIGHTING CIRCUIT AND SWITCH ON/OFF WITH THE OTHER EXISTING LIGHT FIXTURE. (3)

BAIRD, HAMPTON & BROWN
engineering and surveying

6300 Ridglea Place, Suite 700 Fort Worth, TX 76116
mail@bhbinc.com • 817.338.1277 • bhbinc.com
TBPE Firm #44 • TBPLS FIRM #10011300
BHB PROJECT # 2019.010.013

COMM. NO.	1025
DATE	03/04/2021
DRAWN	PJP
CHECKED	MA

BAR IS ONE INCH IN LENGTH ON ORIGINAL DRAWING CHECK SCALE AND ADJUST ACCORDINGLY

ONE INCH

REVISIONS:
(3) ADDENDUM 3 07-29-2021

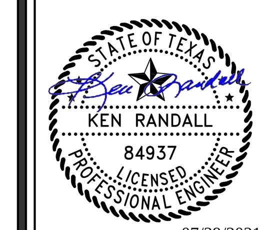

07/29/2021

LBL ARCHITECTS
Listen. Build. Lead.
1106 W. RANDOL MILL ROAD
SUITE 300
ARLINGTON, TEXAS 76012
PHONE (817) 265-1510
FAX (817) 265-1582
WWW.LBLARCHITECTS.COM
TBAE FIRM # BR 1350

TARRANT COUNTY SUBCOURTHOUSE IN ARLINGTON
FINISH-OUT AND RENOVATIONS
700 E. ABRAM STREET, ARLINGTON, TEXAS

SECOND FLOOR PLAN - DEMOLITION LIGHTING
E1.1

NOTES BY SYMBOL *⬡*

1. REMOVE LIGHT FIXTURES AND LIGHTING DEVICES DENOTED WITH THE LETTER "R" IN THIS ROOM / AREA AND RETURN TO OWNER. REMOVE WIRING AND CONDUIT BACK TO SOURCE.
2. REFER TO FIRE ALARM SHOP DRAWINGS FOR RELOCATED AND NEW FIRE ALARM DEVICES. REFER TO GENERAL NOTES, SHEET E2.1 FOR ADDITIONAL INFORMATION.
3. REMOVE EXISTING CEILING FANS AND RETURN TO OWNER
4. RELOCATE EXISTING LIGHT FIXTURE TO LOCATION SHOWN. WIRE TO EXISTING SHELL SPACE LIGHTING CIRCUIT AND SWITCH ON/OFF WITH THE OTHER EXISTING LIGHT FIXTURES. (1)

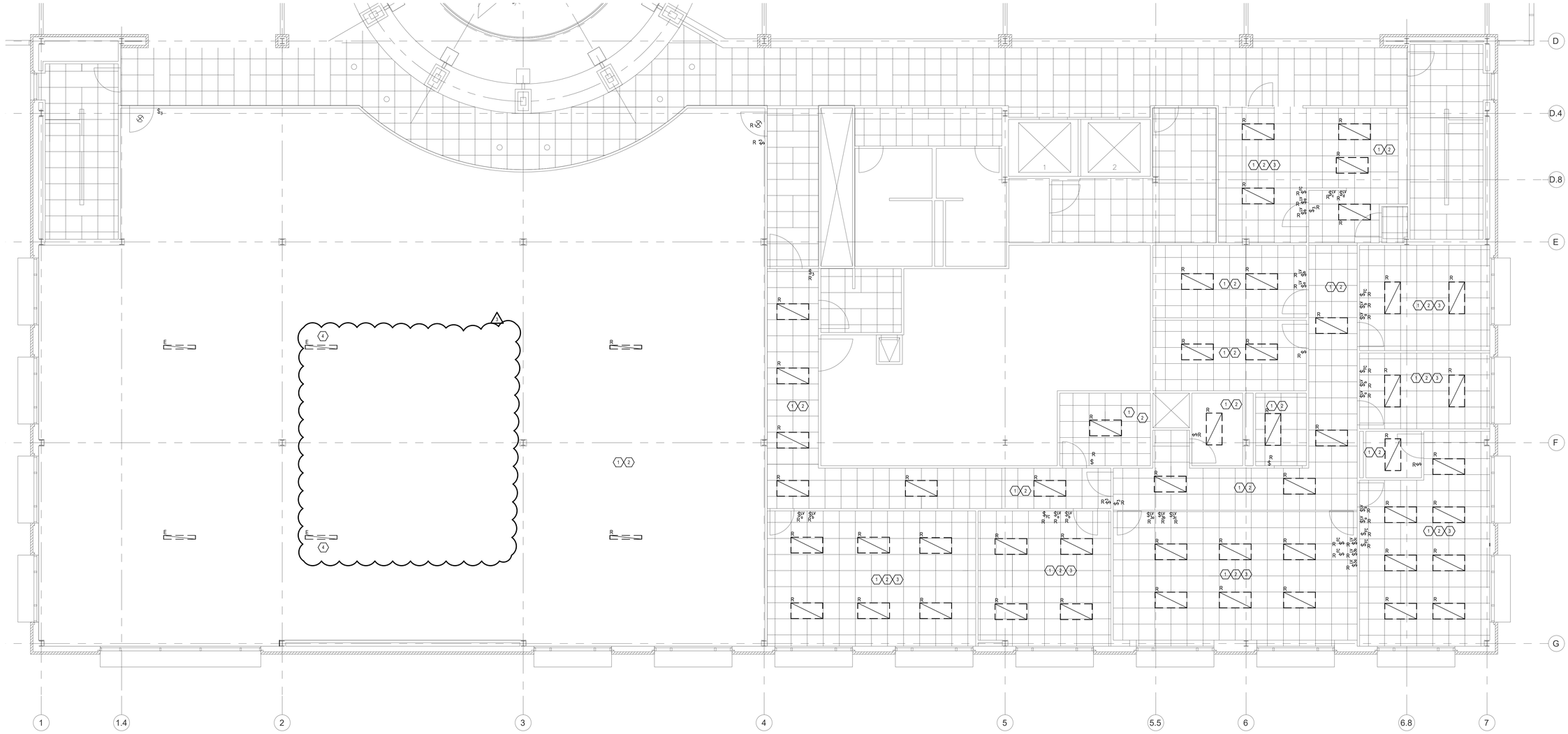

1 THIRD FLOOR PLAN DEMOLITION - LIGHTING
3/16" = 1'-0"

NORTH

BAIRD, HAMPTON & BROWN
engineering and surveying
6300 Ridglea Place, Suite 700 Fort Worth, TX 76116
mail@bhbinc.com • 817.338.1277 • bhbinc.com
TBPE Firm #44 • TBPLS FIRM #10011300
BHB PROJECT # 2019.010.013

COMM. NO. 1025
DATE 03/04/2021
DRAWN PJP
CHECKED MA

BAR IS ONE INCH IN LENGTH ON ORIGINAL DRAWING CHECK SCALE AND ADJUST ACCORDINGLY
ONE INCH

REVISIONS:
(1) ADDENDUM 3 07-29-2021

STATE OF TEXAS
KEN RANDALL
84937
LICENSED PROFESSIONAL ENGINEER
07/29/2021

LBL ARCHITECTS
Listen. Build. Lead.
115E W. RANDOL MILL ROAD
SUITE 100
ARLINGTON, TEXAS 76012
PHONE (817) 265-5182
FAX (817) 265-5192
WWW.LBLARCHITECTS.COM
TBAE FIRM # BR 1330

TARRANT COUNTY SUBCOURTHOUSE IN ARLINGTON

FINISH-OUT AND RENOVATIONS

700 E. ABRAM STREET, ARLINGTON, TEXAS

THIRD FLOOR PLAN - DEMOLITION LIGHTING

E1.2

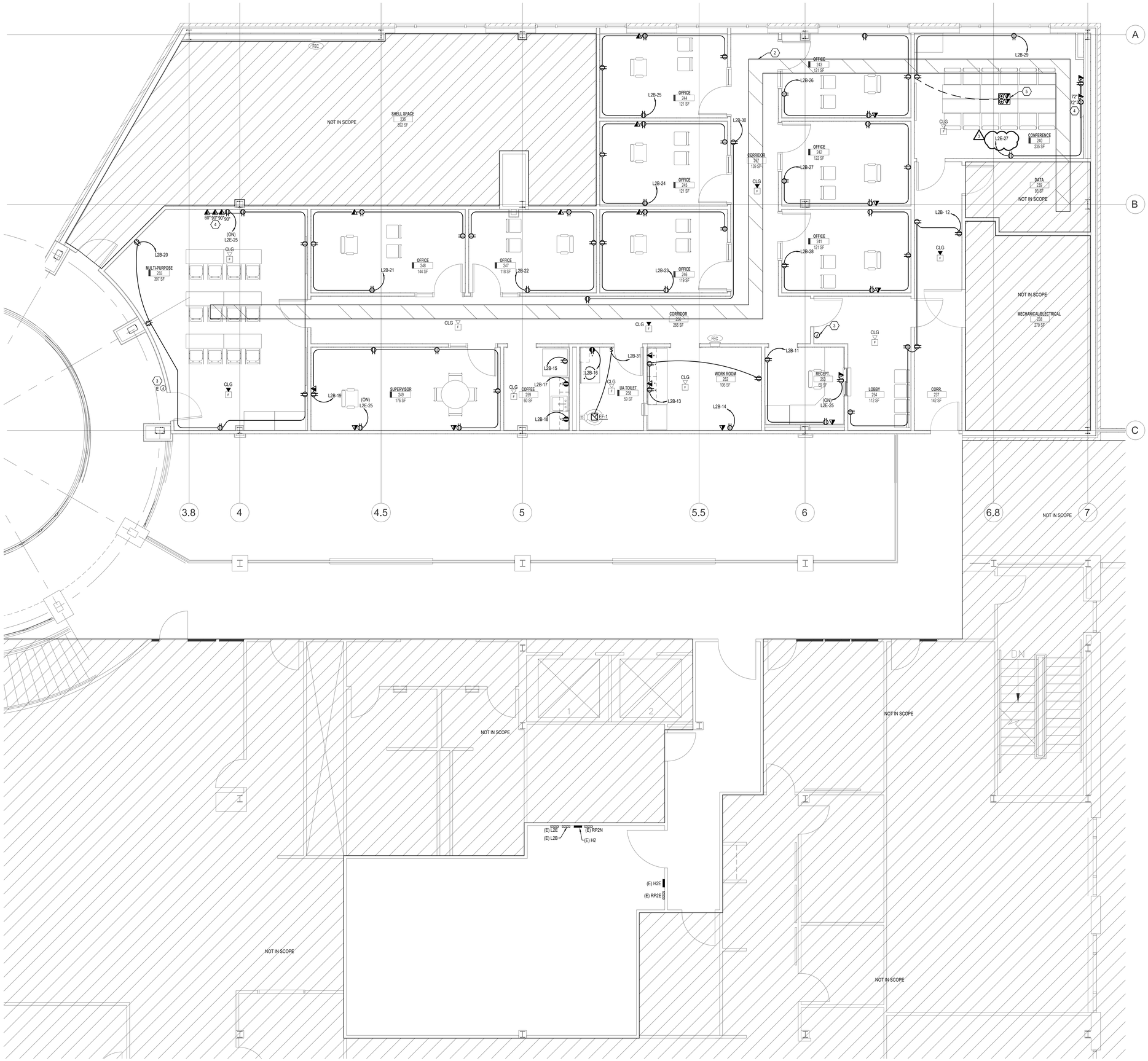

NOTES BY SYMBOL

1. NOT USED.
2. PROVIDE 18" WIDE X 3" DEEP LADDER TYPE CABLE TRAY FROM DATA 239 TO CONFERENCE ROOM 240 AND TO JUVENILE SERVICES SUITES. TIE INTO THE EXISTING CABLE TRAY IF THERE IS AN EXISTING CABLE TRAY SYSTEM COMING FROM DATA 239.
3. PROVIDE FLUSH MOUNTED SINGLE-GANG JUNCTION BOX WITH COVER FOR CARD READER. LOCATE JUNCTION BOX IN WALL ADJACENT TO DOOR. VERIFY EXACT LOCATION WITH ARCHITECT PRIOR TO ROUGH-IN. EXTEND 3/4" CONDUIT WITH PULLWIRE FROM JUNCTION BOX TO 6" ABOVE ACCESSIBLE CEILING.
4. REFER TO AUDIO VISUAL WALL DETAIL ON ARCHITECTURAL SHEET A4.13
5. PROVIDE FLUSH POKE-THROUGH (EQUIVALENT TO HUBBELL #S15PXK4, PROVIDE COVER AS DESCRIBED IN SPECIFICATIONS FOR FLOOR BOXES) WITH TWO DUPLEX RECEPTACLES AND TWO DATA RECEPTACLES IN SEPARATE COMPARTMENTS. PROVIDE CONDUIT FOR DATA / COMMUNICATIONS TO ACCESSIBLE AREA ABOVE CEILING.

GENERAL NOTES

1. CONTRACTOR TO VERIFY ROUTING OF FEEDERS FROM THE SOUTH SIDE OF THE BUILDING TO THE NORTH SIDE OF THE BUILDING (ACROSS THE OPEN CORRIDOR) WITH OWNER PRIOR TO INSTALLATION.
2. PROVIDE SLEEVES IN ALL WALLS THAT GO TO DECK FOR DATA CABLING ROUTING PURPOSES.
3. FIRE ALARM DEVICES INDICATED ON THE PLANS AS SHOWN ARE A MINIMUM. FIRE ALARM DEVICES ARE TO BE EDWARDS EST DEVICES. COORDINATE WITH FIRE ALARM CONTRACTOR FOR EXACT DEVICES THAT WORK WITH THE BUILDING'S EXISTING FIRE ALARM SYSTEM. INSTALLATION OF FIRE ALARM DEVICES TO COMPLY WITH ALL ADA, STATE, NEC AND NFPA CODES AND THE REQUIREMENTS OF THE LOCAL AUTHORITY HAVING JURISDICTION.

1 SECOND FLOOR PLAN - POWER
1/4" = 1'-0"

NORTH

COMM. NO. 1025
DATE 03/04/2021
DRAWN PJP
CHECKED MA

BAR IS ONE INCH IN LENGTH ON ORIGINAL DRAWING CHECK SCALE AND ADJUST ACCORDINGLY

ONE INCH

REVISIONS:
ADDENDUM 3 07-29-2021

STATE OF TEXAS
KEN RANDALL
84937
LICENSED
PROFESSIONAL ENGINEER
07/29/2021

LBL ARCHITECTS
Listen. Build. Lead.
115K N. RANDOL MILL ROAD
SUITE 300
ARLINGTON, TEXAS 76012
PHONE (817) 265-1582
FAX (817) 265-1592
WWW.LBLARCHITECTS.COM
TBAE FIRM # BR 1350

TARRANT COUNTY SUBCOURTHOUSE IN ARLINGTON
FINISH-OUT AND RENOVATIONS
700 E. ABRAM STREET, ARLINGTON, TEXAS

BAIRD, HAMPTON & BROWN
engineering and surveying
6300 Ridglea Place, Suite 700 Fort Worth, TX 76116
mail@bhbinc.com • 817.338.1277 • bhbinc.com
TBPE Firm #44 • TBPLS FIRM #10011300
BHB PROJECT # 2019.010.013

SECOND FLOOR PLAN - POWER

E2.1

GENERAL NOTES

1. PROVIDE SLEEVES IN ALL WALLS THAT GO TO DECK FOR DATA CABLING ROUTING PURPOSES.
2. FIRE ALARM DEVICES INDICATED ON THE PLANS AS SHOWN ARE A MINIMUM. FIRE ALARM DEVICES ARE TO BE EDWARDS EST DEVICES. COORDINATE WITH FIRE ALARM CONTRACTOR FOR EXACT DEVICES THAT WORK WITH THE BUILDING'S EXISTING FIRE ALARM SYSTEM. INSTALLATION OF FIRE ALARM DEVICES TO COMPLY WITH ALL ADA, STATE, NEC AND NFPA CODES AND THE REQUIREMENTS OF THE LOCAL AUTHORITY HAVING JURISDICTION.

NOTES BY SYMBOL "⬡"

1. RE-USE EXISTING RECEPTACLES IN THIS SPACE THAT ARE WITHIN 2'-0" OF LOCATION OF NEW RECEPTACLE LOCATION.
2. NOT USED.
3. RELOCATE EXISTING RECEPTACLES AND DATA OUTLETS TO NEW WALL LOCATION AND EXTEND CONDUCTORS TO EXISTING CIRCUITS.
4. RELOCATE EXISTING RECEPTACLE FOR REFRIGERATOR AND RE-USE EXISTING CIRCUIT.
5. RELOCATE EXISTING ABOVE-COUNTER GFCI RECEPTACLE AND CONNECT NEW GFCI RECEPTACLE TO EXISTING CIRCUIT.
6. REMOVE ANY EXISTING CEILING FANS IN THIS ROOM AND RETURN TO OWNER. PROVIDE JUNCTION-BOX IN CENTER OF THE ROOM AT CEILING HEIGHT FOR FUTURE CEILING FAN. PROVIDE WALL SWITCH FOR FAN CONTROL. REFER TO SPECIFICATIONS SECTION 01 02 00 FOR ADDITIONAL INFORMATION REGARDING CEILING FANS.
7. REMOVE EXISTING RECEPTACLE AND DATA OUTLET.
8. REFER TO AUDIO VISUAL WALL DETAIL FOR THE FITNESS ROOM ON ARCHITECTURAL SHEET A4.10.
9. CONFIRM MOUNTING HEIGHT OF WALL FANS WITH ARCHITECT PRIOR TO INSTALLATION OF RECEPTACLE. FAN RECEPTACLE TO BE CONTROLLED WITH TOGGLE SWITCH MOUNTED AT 48" AFF.
10. REFER TO CONFERENCE ROOM MONITOR DETAIL ON ARCHITECTURAL SHEET A4.13 / 3
11. COORDINATE EXACT HEIGHT OF TELEPHONE MOUNTING WITH ARCHITECT.
12. REPLACE EXISTING WATER HEATER 20A/3POLE CIRCUIT BREAKER WITH A 30A/3POLE CIRCUIT BREAKER TO MATCH EXISTING TYPE. PROVIDE 3#10 AWG AND #10 GROUND FOR CONDUCTORS. RE-USE EXISTING 30A DISCONNECT SWITCH.

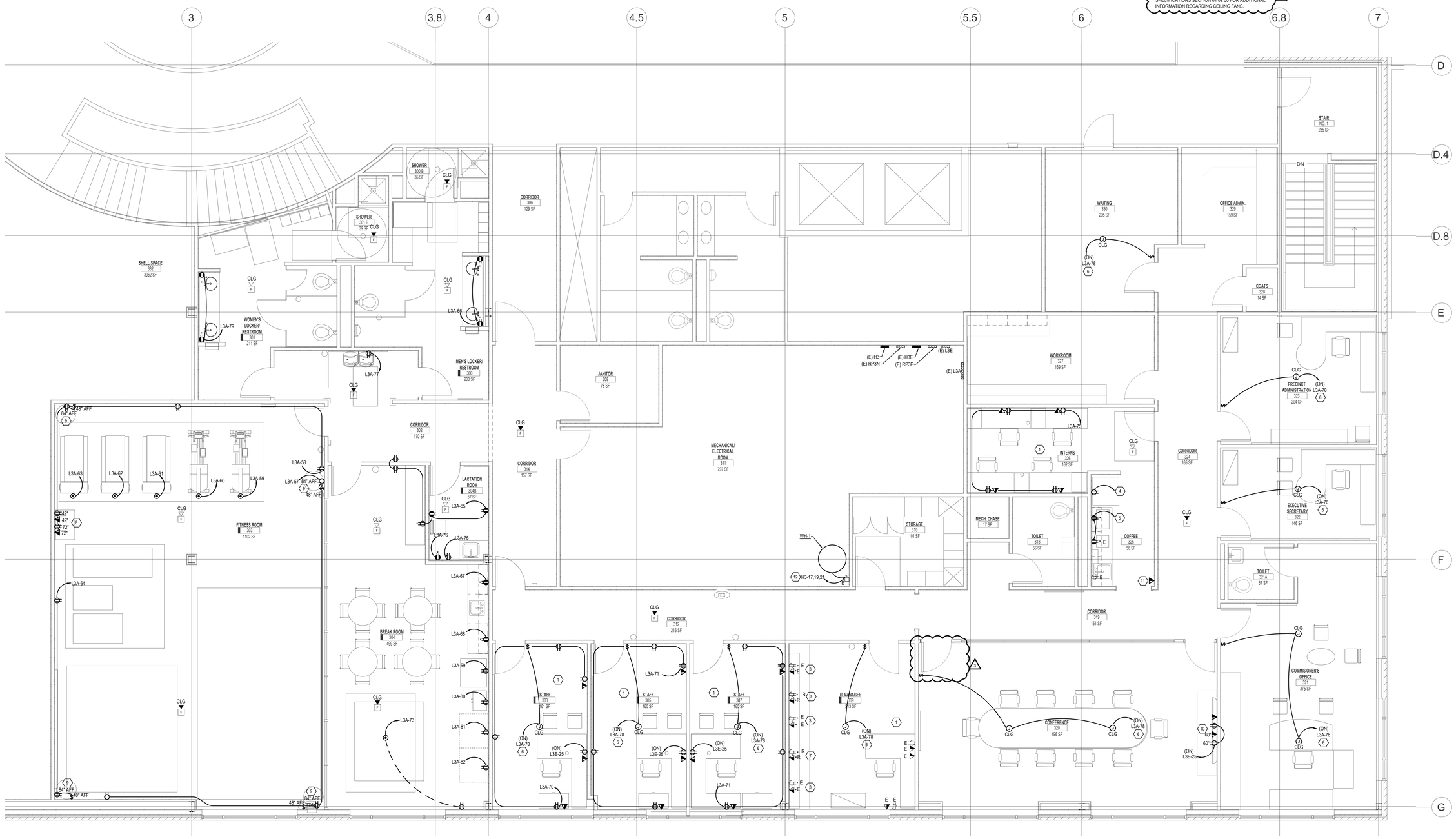

1 THIRD FLOOR PLAN - POWER

1/4 = 1'-0"

NORTH

BAIRD, HAMPTON & BROWN
engineering and surveying

6300 Ridglea Place, Suite 700 Fort Worth, TX 76116
mail@bhbinc.com • 817.338.1277 • bhbinc.com
TBPE Firm #44 • TBPLS FIRM #10011300
BHB PROJECT # 2019.010.013

COMM. NO.	1025
DATE	03/04/2021
DRAWN	PJP
CHECKED	MA

BAR IS ONE INCH IN LENGTH ON ORIGINAL DRAWING CHECK SCALE AND ADJUST ACCORDINGLY

ONE INCH

REVISIONS:

1 ADDENDUM 3 07-29-2021

STATE OF TEXAS
KEN RANDALL
84937
LICENSED PROFESSIONAL ENGINEER
07/29/2021

LBL ARCHITECTS
Listen. Build. Lead.
1106 W. RANDOL MILL ROAD
SUITE 300
ARLINGTON, TEXAS 76012
PHONE (817) 265-1492
FAX (817) 265-1502
WWW.LBLARCHITECTS.COM
TBAE FIRM # BR 1330

TARRANT COUNTY SUBCOURTHOUSE IN ARLINGTON

FINISH-OUT AND RENOVATIONS

700 E. ABRAM STREET, ARLINGTON, TEXAS

THIRD FLOOR PLAN - POWER

E2.2

PRODUCT SUBSTITUTION REQUEST FORM

(During the Bidding Phase)

Project: ITB- Tarrant County Arlington Sub Courthouse Finish out & Renovation

To: LBL Architects Inc.

Reference: Visual Display Surfaces

Substitution Request No:

From: Specialties Direct Inc.

Date: 7/2/2021

A/E Project No:

Contract For:

Specification Title: Visual Display Surfaces

Section: 10 11 00 Page: 10 11 00-2 Article / Paragraph: 2.01, B, 1

Proposed Substitution: ASI Visual Display Products

Manufacturer: ASI Visual Display Products Address: 2210 Dunwin Dr. Mississauga, Ontario L5L 1C7, Canada

Telephone: (908) 822-4287 Proposed Model No.: ASI VDP Series 9800

Attached data includes product description, specifications, drawings, photographs, and performance and test data adequate for evaluation of the request; applicable portions of the data are clearly identified.

Attached data also includes a description of changes to the Contract Documents that the proposed substitution will require for its installation.

The undersigned certifies:

- Proposed substitution has been fully investigated and determined to be equal or superior in all respects to specified product.
- Same warranty will be furnished for proposed substitution as for specified product.
- Same maintenance service and source of replacement parts, as applicable, is available.
- Proposed substitution will have no adverse effect on other trades and will not affect or delay progress schedule.
- Proposed substitution does not affect dimensions and functional clearances.
- Payment will be made for changes to building design, including A/E design, detailing, and construction costs caused by substitution.

Submitted By: Debra Neal Signed : Debra Neal

Firm: Specialties Direct Texas Inc Address: 1102 Avenue T Grand Prairie 75050

Phone: o: 214-412-2644 / c: 706-491-9670

A/E's REVIEW & ACTION

- [x] Substitution approved – Make submittals in accordance with Project Manual requirements.
- [ ] Substitution approved as noted – Make submittals in accordance with Project Manual requirements.
- [ ] Substitution rejected – Use specified materials.
- [ ] Substitution Request received too late – Use specified materials.

A/E Signature: Date: 7-27-21

Supporting Data Attached: ☐ Drawings ☐ Product Data ☐ Samples ☐ Tests ☐ Reports ☐

END OF REQUEST FORM

ASI Group Canada

PORCELAIN WRITING SURFACE

All writing surfaces supplied and/or supplied and installed by ASI Group Canada Inc. are hereby guaranteed for the Life of the Building.

Guarantee does not include for misuse, neglect, lack of proper care and maintenance, or willful or accidental damage by any party.

This guarantee extends to replacement of defective writing surfaces only and does not include the labour cost for removal or re-installation, shipping costs of defective or replacement materials, applicable federal, provincial or municipal taxes.

ASI Group Canada Inc.

2210 Dunwin Drive, Mississauga, Ontario L5L 1C7
www.asi-visualdisplayproducts.com

TEL: 905.822.4287
FAX: 905.607-6885

ELEVATION:

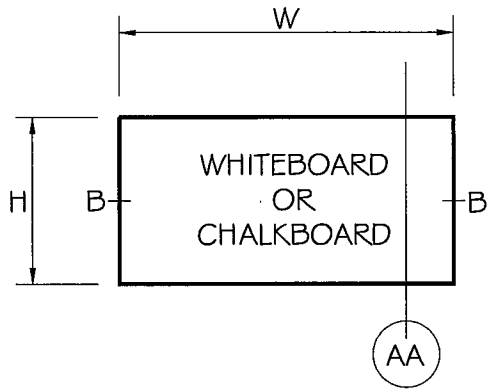

NOTE:
FOR BOARDS UP TO 8' 0" WIDE 3 CLIPS FOR TOP WILL BE PROVIDED, THEY MUST BE FASTENED INTO DRYWALL STUDS OR INTO CONCRETE USING PLASTIC PLUGS.
FOR BOARDS 8' 0" TO 12' 0" THESE REQUIRE 4 L CLIPS FOR TOP.

SECTIONS:

SECTION A-A

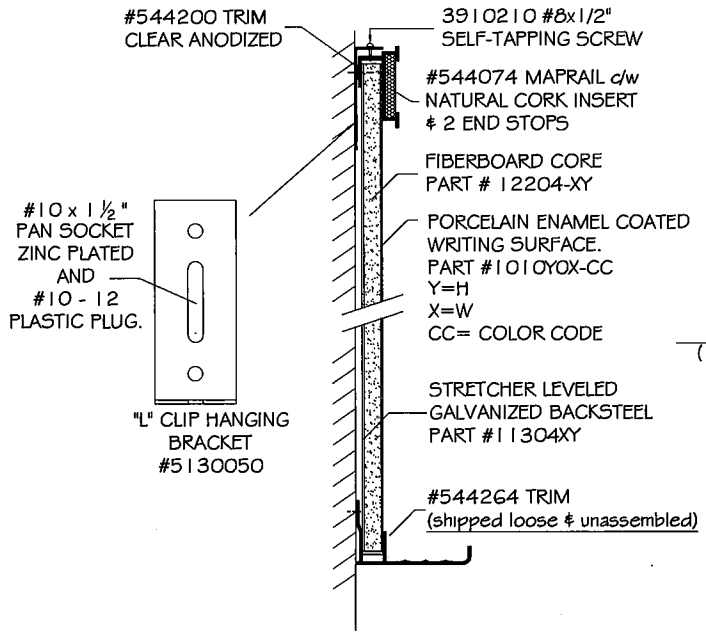

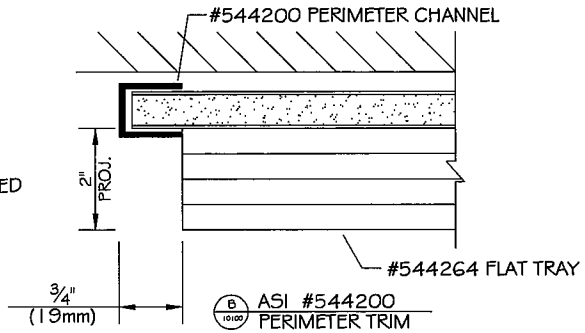

ALUMINUM TRIM:
SERIES 9800 "PRE-FRAMED".
FINISH TO BE CLEAR ANODIZED.

DESCRIPTION:
9800 SERIES "PRE-FRAMED" WHITE / CHALK BOARD WITH 2" MAP RAIL AND FLAT TRAY LOOSE.

PRODUCT CODE:

98	01	11	YXX	XXX
SERIES	BOARD	TRIM	SIZE	COLOR

SIZE CODE:

203 - 2'(H) X 3'(W)
304 - 3'(H) X 4'(W)
404 - 4'(H) X 4'(W)
406 - 4'(H) X 6'(W)
408 - 4'(H) X 8'(W)
410 - 4'(H) X 10'(W)
412 - 4'(H) X 12'(W)
504 - 5'(H) X 4'(W)
506 - 5'(H) X 6'(W)
508 - 5'(H) X 8'(W)
510 - 5'(H) X 10'(W)
512 - 5'(H) X 12'(W)

COLOR CODE:

29 - WHITE HIGH GLOSS
29L - WHITE LOW GLOSS
11 - CHALK BLACK
06 - CHALK GREEN

PRODUCT CODES
48 HOURS SHIP PROGRAM

98011140629.
98011140829.

NOTES AND/OR APPROVAL

ASI Visual Display Products

2210 Dunwin Drive
Mississauga, Ontario L5L 1C7
Phone: (905) 822-4287
www.asi-visualdisplayproducts.com
estimating@asi-visualdisplayproducts.com

PROJECT NAME & LOCATION:

ARCHITECT:

CONTRACTOR:

F:\ACADR14\FILENAME | PAGE NO. 1 OF 1

DRAWN BY: J. UGARTE | DATE: 07 NOVEMBER 2019

PRODUCT SUBSTITUTION REQUEST FORM

(During the Bidding Phase)

Project: ITB- Tarrant County Arlington Sub Courthouse Finish out & Renovation

To: LBL Architects Inc.

Reference: Toilet Compartments

Substitution Request No:

From: Specialties Direct Inc.

Date: 7/2/2021

A/E Project No:

Contract For:

Specification Title: Toilet Compartments

Section: 10 21 13 Page: 10 21 13-1 Article / Paragraph: 2.01. A

Proposed Substitution: Accurate Partitions

Manufacturer: Accurate Partitions Address: 160 Tower Drive, Burr Ridge, IL 60527

Telephone: (708) 442 6800 Proposed Model No.: Accurate P-LAM Moisture Guard

Attached data includes product description, specifications, drawings, photographs, and performance and test data adequate for evaluation of the request; applicable portions of the data are clearly identified.

Attached data also includes a description of changes to the Contract Documents that the proposed substitution will require for its installation.

The undersigned certifies:

- Proposed substitution has been fully investigated and determined to be equal or superior in all respects to specified product.
- Same warranty will be furnished for proposed substitution as for specified product.
- Same maintenance service and source of replacement parts, as applicable, is available.
- Proposed substitution will have no adverse effect on other trades and will not affect or delay progress schedule.
- Proposed substitution does not affect dimensions and functional clearances.
- Payment will be made for changes to building design, including A/E design, detailing, and construction costs caused by substitution.

Submitted By: Debra Neal Signed : Debra Neal

Firm: Specialties Direct Texas Inc Address: 1102 Avenue T Grand Prairie 75050

Phone: o: 214-412-2644 / c: 706-491-9670

A/E's REVIEW & ACTION

- ☐ Substitution approved – Make submittals in accordance with Project Manual requirements.
- ☐ Substitution approved as noted – Make submittals in accordance with Project Manual requirements.
- ☑ Substitution rejected – Use specified materials.
- ☐ Substitution Request received too late – Use specified materials.

A/E Signature: Date: 7-27-21

Supporting Data Attached: ☐ Drawings ☐ Product Data ☐ Samples ☐ Tests ☐ Reports ☐

END OF REQUEST FORM

ASI Accurate Partitions

Specifications

Plastic Laminate Moisture Guard Partitions

Floor Anchored/Overhead Braced

5.3

Plastic Laminate Partitions with Floor Anchored/Overhead Braced Mounting Style

Part 1 - General

1.01 Work Included

A. The toilet partitions shall be plastic laminate with floor anchored/overhead braced mounting style as manufactured by **ASI** Accurate Partitions, Burr Ridge, Illinois.

B. Furnish all labor and materials necessary for completion of work in this section as shown in the approved drawings and specified herein.

1.02 Related Work – Specified elsewhere shall include accessories and anchorage/blocking for attachment of partitions.

Part 2 – Product

2.01 Doors, Panels and Urinal Screens – Shall have a finished thickness of 1" with decorative plastic laminate is applied to 7/8" thick particleboard.

2.02 Pilasters – Shall have a finished thickness of 1 ¼ " with decorative plastic laminate applied to 1 1/8" thick particleboard

2.03 Material – Doors, panels, pilasters and urinal screens shall be fabricated from 45-pound density, resin impregnated 7/8 " thick particle board. Decorative plastic laminate shall be applied to the particleboard with a non-toxic, water resistant adhesive under high pressure. All components shall be edge banded prior to face lamination to ensure moisture run-off and vandal resistance.

2.04 Finish – All components shall have faces and edges covered with a decorative, vertical grade (.50 thickness) laminate.

2.05 Color - will be selected from Accurate's full range of standard designer colors.

2.06 Door Hardware – Shall be Accurate gravity cam-action hinge that permits door to return to a pre-set position when not locked. Hinge, strike and keeper shall be chrome plated Zamac to resist corrosion and through bolted with tamper resistant barrel nuts and shoulder screws. Cam-action hinge shall allow emergency access by lifting the door from the bottom.

2.07 Mounting Hardware – Chrome plated Zamac stirrup brackets shall be secured to walls and pilasters with stainless steel tamper resistant fasteners. Panels shall be through bolted with tamper resistant barrel nuts and shoulder screws.

2.08 Construction Design – Partitions shall be anchored to the floor by a 1-piece, 3" high, stainless steel anchor trim with bottom plate through which concrete anchors are driven into the floor. Pilaster is leveled with machine screw threaded into an insert in bottom of pilaster and is fastened to anchor trim with tamper resistant stainless fasteners. Aluminum headrail with anti-grip profile shall provide overhead bracing and span all partitions and brace the end pilaster to the back wall.

Part 3 – Execution

3.01 Installation – Shall be installed in accordance to the Accurate installation instructions with compartments rigid, straight and plumb. Doors and panels shall be mounted 12" above the finished floor.

3.02 Warranty – **ASI** Accurate Partitions guarantees its plastic laminate partitions, properly maintained, against discoloration or delamination for 5 YEARS from the date of receipt by the customer. If material is found defective during that period, the material shall be replaced free of charge. No credits or allowances shall be issued for any labor or expenses relating to the replacement of components covered under the warranty plan.

160 Tower Drive
Burr Ridge, IL 60527

Tel: (708) 442-6800
Fax: (708) 442-7439

www.asi-accuratepartitions.com

ASI Accurate Partitions

October 17, 2019

ASI Accurate Partitions warrants that its products will be free of defects in material or workmanship under normal usage from the date of invoice for a period as stated below.

Powder Coated Steel: Three (3) years against chipping, flaking, cracking or discoloration

Stainless Steel: Five (5) years against corrosion or discoloration

Moisture Guard™ Plastic Laminate: Five (5) years against discoloration or delamination

Legacy Plastic Laminate: Two (2) years against discoloration or delamination

Black Core/Color-Thru Phenolic: Twenty-five (25) years against delamination, breakage or corrosion

Solid Plastic (HDPE): Twenty-five (25) years against delamination, breakage or corrosion

If material is found to be defective during the above period, the material shall be repaired or replaced (at ASI Accurate Partitions' discretion) free of charge. No credits or allowances shall be issued for any labor or expenses relating to the repair replacement of components covered under the warranty plan. The repair or replacement of material shall be the sole remedy of purchaser and ASI Accurate Partitions shall not be liable for incidental, consequential or indirect damages caused by any defects in the partitions or any delay in repairing or replacing defective product.

These warranties shall not be applicable if vandalism, improper installation, or improper cleaning/maintenance of partitions has contributed as just cause for the partition failure. These warranties extend to commercial and industrial purchasers and do not extend to any other persons, including consumers of the partitions. These warranties are in lieu of all other warranties, express or implied, including any implied warranty of merchantability or fitness for a particular purpose or otherwise.

160 Tower Drive. Burr Ridge, IL 60527
www.asi-accuratepartitions.com
Tel: 708.442.6800
Fax: 708.442.7439

PRODUCT SUBSTITUTION REQUEST FORM

Project: ITB- Tarrant County Arlington Sub
Courthouse Finish out & Renovation

To: LBL Architects Inc.

Reference: Toilet, Bath, and Laundry Accessories

Substitution Request No:

From: Specialties Direct Inc.

Date: 7/2/2021

A/E Project No:

Contract For:

Specification Title: Toilet, Bath, and Laundry Accessories

Section: 10 28 00 Page: 102800-1 Article / Paragraph: 2.01, A, 1

Proposed Substitution: American Specialties Inc.

Manufacturer: American Specialties Inc Address: 441 Saw Mill River Road Yonkers, NY 10701-4913

Telephone: (914) 476 9000 Proposed Model No.: ASI Product #'s: 0620, 0332, 3801, 3874, 3850, 3857, 0692, 1204-1 1200-V42, 7340-S, 3001, 7301-S, 8203-28, 8206-L, 0398-D

Attached data includes product description, specifications, drawings, photographs, and performance and test data adequate for evaluation of the request; applicable portions of the data are clearly identified.

Attached data also includes a description of changes to the Contract Documents that the proposed substitution will require for its installation.

The undersigned certifies:

- Proposed substitution has been fully investigated and determined to be equal or superior in all respects to specified product.
- Same warranty will be furnished for proposed substitution as for specified product.
- Same maintenance service and source of replacement parts, as applicable, is available.
- Proposed substitution will have no adverse effect on other trades and will not affect or delay progress schedule.
- Proposed substitution does not affect dimensions and functional clearances.
- Payment will be made for changes to building design, including A/E design, detailing, and construction costs caused by substitution.

Submitted By: Debra Neal

Signed : Debra Neal

Firm: Specialties Direct Texas Inc

Address: 1102 Avenue T Grand Prairie 75050

Phone: o: 214-412-2644 / c: 706-491-9670

A/E's REVIEW & ACTION

- [x] Substitution approved – Make submittals in accordance with Project Manual requirements.
- [ ] Substitution approved as noted – Make submittals in accordance with Project Manual requirements.
- [ ] Substitution rejected – Use specified materials.
- [ ] Substitution Request received too late – Use specified materials.

A/E Signature:

Date: 7-27-21

Supporting Data Attached: ☐ Drawings ☐ Product Data ☐ Samples ☐ Tests ☐ Reports ☐

END OF REQUEST FORM

BOBRICK

Technical Data

STAINLESS STEEL SHELF

B-298

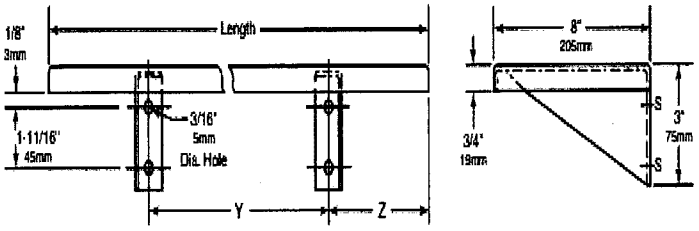

STANDARD STOCK SIZES

Model No.	Length	No. Of Brackets	Dimension Y	Dimension Z
B-298x18	18" (455mm)	2	12" (305mm)	3" (75mm)
B-298x24	24" (610mm)	2	18" (455mm)	3" (75mm)

Custom sizes available up to maximum length of 28 feet (853cm). Shelves longer than 8 feet (244cm) are furnished in multiple sections.

MATERIALS:

Shelf — 18-8, type-304, 18-gauge (1.2mm) stainless steel with satin finish. 3/4" (19mm) return edges for maximum rigidity. Front edge is hemmed for safe handling.

Mounting Brackets — 18-8, type-304, 16-gauge (1.6mm) stainless steel with satin finish. Welded to back return of shelf and secured inside front hem of shelf.

INSTALLATION:

Secure shelf to wall with sheet-metal screws (not furnished) at points indicated by an *S*. For plaster or dry wall construction, provide concealed backing to comply with local building codes, then secure shelf with sheet-metal screws. For other wall surfaces, provide fiber plugs or expansion shields for use with sheet-metal screws, or provide 1/8" (3mm) toggle bolts or expansion bolts.

SPECIFICATION:

Shelf shall be type-304, 18-gauge (1.2mm) stainless steel with satin finish. Mounting brackets, welded to shelf, shall be 16-gauge (1.6mm) stainless steel. Shelf shall be _____ (insert length) long by 8" (205mm) wide with 3/4" (19mm) return edges. Front edge shall be hemmed for safe handling.

Stainless Steel Shelf shall be Model _____ (insert model number) of Bobrick Washroom Equipment, Inc., Clifton Park, New York; Jackson, Tennessee; Los Angeles, California; Bobrick Washroom Equipment Company, Scarborough, Ontario; Bobrick Washroom Equipment Pty. Ltd., Australia; and Bobrick Washroom Equipment Limited, United Kingdom.

AMERICAN SPECIALTIES, INC.
441 Saw Mill River Road, Yonkers, NY 10701 (914) 476-9000
www.americanspecialties.com

MODEL No.	0692 SERIES
ISSUED:	1-87
REVISED:	10-06

SURFACE MOUNTED SHELF

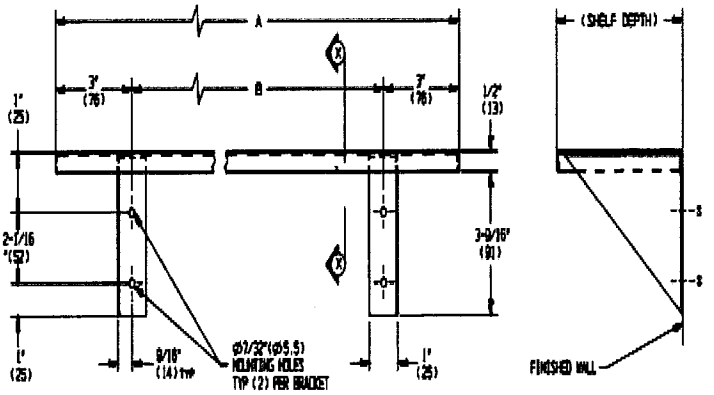

SPECIFICATION

Surface Mounted Shelf shall be fabricated of alloy 18-8 stainless steel, type 304. Brackets shall be 16 gauge and shelf shall be 18 gauge, with a 1/2" (13) lip on all four (4) sides. Front lip shall be hemmed under for safety. All exposed surfaces shall be No 4 satin finish and shall be protected during shipment with PVC film easily removable after installation. Structural assembly of shelf and bracket supports shall be of welded construction. Shelf shall be sized and brackets located as per standard schedule or shall be custom fabricated to customer supplied drawing. Scheduled shelves equal to or less than 8" (203) deep shall have standard 4" (102) high brackets and shelves in the depth range greater than 8" (203) to 12" (305) shall have 6" (152) high brackets. Consult factory for shelves deeper than 12" (305).

Surface Mounted Shelf shall be Model No 0692-xxx as manufactured by American Specialties, Inc., 441 Saw Mill River Road, Yonkers, New York 10701-4913

SCHEDULE OF AVAILABILITY						
SHELF DEPTH & MODEL SUFFIX ADDER				SHELF LENGTH DIMENSIONS/BRACKET SPACING		
5" depth/length	6" depth/length	8" depth/length	specify depth/length	A = length	B = spacing	Number of brackets
-512	-612	-812	-XX12	12"	6"	2
-516	-616	-816	-XX16	16"	10"	2
-518	-618	-818	-XX18	18"	12"	2
-524	-624	-824	-XX24	24"	18"	2
-530	-630	-830	-XX30	30"	12"	3
-536	-636	-836	-XX36	36"	15"	3
-548	-648	-848	-XX48	48"	14"	4
-560	-660	-860	-XX60	60"	18"	4
-572	-672	-872	-XX72	72"	16-1/2"	5
-5XX	-6XX	-8XX	-XXXX	AA"	BB"	NN

INSTALLATION

Unit is surface mounted on wall or partition using No 10 (M5) self-tapping screws or other appropriate fasteners (by others) through holes provided in support brackets. Ensure that adequate in wall blocking or other reinforcement is provided (by others) to support shelf and intended loading weight. For compliance with ADA Accessibility Guidelines unit should be installed so that shelf top is between 48" (1219) maximum above finished floor (AFF) and 32" (813) minimum AFF. Typical for general utility is 42" (1067) AFF or 18" (457) above washbasin.

OPERATION

Shelf is stable and stationary after proper and secure mounting to adequate wall reinforcement or stud structure. Shelf is suitable for wet (self-contained) or dry materials storage.

BOBRICK

Technical Data

1½" (38mm) DIAMETER STAINLESS STEEL GRAB BARS WITH SNAP FLANGE

B-6806 SERIES

Specify Finish Required:
- ☐ Satin-finish, slip-resistant surface
- ☐ Peened surface; add suffix .99 to model number

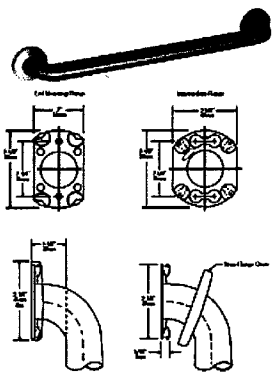

HORIZONTAL	VERTICAL	TWO-WALL WHEELCHAIR COMPARTMENT
B-6806 x 12, 18, 24, 30, 36, 42, 48		B-68107
HORIZONTAL TUB / SHOWER COMPARTMENT BAR 24 x 36	HORIZONTAL TWO-WALL BAR for Shower Stall	TWO-WALL TOILET COMPARTMENT BAR 42 x 54
B-6806	B-6861	B-6867

continued . . .

The illustrations and descriptions herein are applicable to production as of the date of this Technical Data Sheet. The manufacturer reserves the right to, and does from time to time, make changes and improvements in designs and dimensions.

Rev. 1/11/16 ™ Printed in U.S.A.
© 2016 by Bobrick Washroom Equipment, Inc.

AMERICAN SPECIALTIES, INC.
441 Saw Mill River Road, Yonkers, NY 10701
(914) 476.9000 • (914) 476.0688
www.americanspecialties.com

MODEL №:	3800
ISSUED:	01/87
REVISED:	7 MAR 2017

1-1/2" DIAMETER [Ø38] GRAB BAR SERIES WITH SNAP-ON FLANGE COVERS

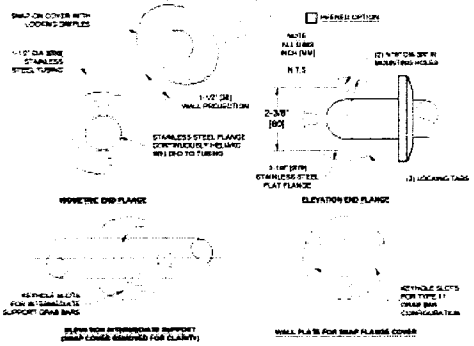

SPECIFICATION

1-1/2" Diameter [Ø38] Grab Bar with Snap-On Flange Covers for concealed mounting shall be type 304 stainless steel alloy 18-8. Tubing shall be 1-1/2" diameter [Ø38] x 18 gauge (0.048") [1.2]. Snap-on cover shall be 22 gauge (0.03") [0.8]. Flange shall be 1/8" [3] thick and shall be heliarc welded to tubing with a continuous concealed bead. End flanges shall have two (2) 5/16" diameter [Ø7.5] mounting holes. Center posts (if any) shall have (2) keyhole slots to ease installation access. All exposed surfaces shall have a satin finish and shall be protected during shipment with a plastic bag. For optional non-slip surface add suffix –P (peened).

1-1/2" Diameter [Ø38] Grab bar with Snap-On Flange Covers shall be Series № 3800 of American Specialties, Inc., 441 Saw Mill River Road, Yonkers, New York 10701- 4913

STRENGTH

ASI Grab Bars are designed to meet and exceed ADA requirements as published in CABO/ANSI A117.1 and 2010 ADA Accessibility Standards. Mounting to the wall is a critical part of the system to meet this requirement. To withstand the shear, tension or pullout, and torsion loads generated by the maximum loading, the fastener system must be adequately sized.

INSTALLATION

Use grab bar as template to mark mounting holes locations and pre-drill holes. Install bar using two (2) № 10 self-tapping pan head screws and flat washers (by others) or other fastener system (by others) to suit conditions for each flange. Appropriate anchoring and backing must be provided in accordance with local building codes or as specified on Architects Plans prior to wall finishing. For compliance with 2010 ADA Accessibility Standards, install unit so that the top of the grab bar is 33" [840] minimum above finished floor (AFF) to 36" [915] maximum AFF. Anchors are available from ASI and must be specified separately for each grab bar style scheduled (see 3900 series).

Accessory Specialties AMERICAN DISPENSER Desert Ray Products BOBRICK

THE MANUFACTURER RESERVES THE RIGHT TO MAKE CHANGES AS SHOWN OR DISCONTINUE WITHOUT FORMAL NOTICE

MATERIALS:

Grab Bar — 18-8 S, type-304, 18-gauge (1.2mm) stainless steel tubing with satin-finish, slip-resistant surface. 1-1/2" (38mm) outside diameter. Ends are heliarc welded to flanges. Clearance between the grab bar and wall is 1-1/2" (38mm).

Concealed Mounting Flanges — 18-8 S, type-304, 11-gauge (3.0mm) thick, stainless steel plate end flanges 2" x 3-1/2" (50 x 80mm) with holes for attachment to wall. Intermediate flanges 2½"/8" x 3-1/8" (65 x 80mm) wide x 3-1/2" (90mm) diameter.

Snap Flange Covers — 18-8 S, type-304, 20-gauge (0.8mm) drawn stainless steel with satin finish 3-1/4" (83mm) diameter x 1/2" (13mm) deep. Each cover snaps over mounting flange to conceal mounting screws.

STRENGTH:

Bobrick grab bars that provide 1-1/2" (38mm) clearance from wall can support loads in excess of 500 pounds (454kg) if properly installed. Other grab bar configurations can support loads in excess of 250 pounds (114kg) if properly installed, complying with accessible design (including ADAAG in the U.S.A.) for structural strength.

Safety Warning: Grab bars are no stronger than the anchors and walls to which they are attached and, therefore, must be firmly secured in order to support the loads for which they are intended. To avoid potential injury, the building owner or maintenance personnel should remove the grab bar from service if the grab bar is not adequately secured to wall or if there is any observed damage to the walls.

INSTALLATION:

Provide concealed anchor device or backing as specified or required in accordance with local building codes before wall is finished. Position concealed mounting flanges to anchor device or backing with at least two screws opposing each other in each flange. Snap flange covers over each mounting flange to conceal mounting screws. Concealed anchor devices and mounting screws are not included with Bobrick grab bars and must be specified as an accessory.

For Grab Bars with an Intermediate Flange(s), Pull Snap-Flange Covers away from mounting flanges. Place grab bar in desired mounting location. Use intermediate flange as a template to mark location of mounting screws at inter-mediate flange only. Mark screw locations at the center of the slot in the middle of the double-keyhole shaped mounting holes (2) in the inter-mediate flange. Remove grab bar from wall. Drive the intermediate flange mounting screws into wall or mounting location. Note: Make sure to leave a space of just over 1/8" (3.17mm) between the underside of the screw head and the wall. Install grab bar on the wall by placing the round ends of the inter-mediate flange double-keyhole shaped mounting holes over the mounting screws (2) are located in the middle of the flange slots. Install the mounting screws into the wall at the oval flanges and secure tightly. Tighten the mounting screws at the intermediate flange. Press all snap-flange covers into place to conceal mounting flanges.

Note: Recommend use of 1/4" or #14 sheet metal or wood screws to install intermediate Flange. (12 screws may also be used).

Required Install Notes:

1. **Mounting Kits** — Bobrick offers a mounting kit for installing grab bars. one Bobrick mounting kit is required for each flange.

Mounting Kit No.	Description
212-30	Consists of 2 (2) 14 x 3/4" type 304 stainless steel, Phillips round-head, sheet metal screws.

2. **Grab Bar Fastener** — Bobrick offers a grab bar fastening system that secures all Bobrick grab bar styles. one Bobrick fastener is required for each flange. Install grab bar without backing in wall requires minimum 1/2" (13mm) thick painted or tiled drywall.

Wright™ Fastener No.	Description
961-4	Consists of 10-32 x 1/16" round head, Phillips 18/8 stainless steel screws. (1) Wright grab bar fastener.

3. **Optional Anchor Device** — Bobrick grab bar anchor device includes stainless steel machine screws to be used for attaching grab bars to anchors. one Bobrick concealed anchor device is required for each flange.

Optional Anchor No.	Description
2065	Anchor for 3/4" to 1" (19-31mm) panel. 1 anchor required for each flange.
2066	Anchor for 1/2" to 1" (13mm) panel. 1 anchor required for each flange.

SPECIFICATION:

Grab bar shall be type-304 stainless steel with satin finish, slip-resistant surface. Grab bar shall have 18-gauge (1.2mm) wall thickness and 1-1/2" (38mm) outside diameter. Clearance between the grab bar and wall shall be 1-1/2" (38mm). Concealed mounting flanges shall be 11-gauge (3.0mm) thick stainless steel plate, 2" x 3-1/2" (50 x 80mm), and equipped with at least two screw holes for attachment to wall. Flange covers shall be 22 gauge (0.8mm), 3-1/4" (83mm) diameter x 1/2" (13mm) deep, and shall snap over mounting flange to conceal mounting screws and/or Wright fasteners. Ends of grab bar shall pass through concealed mounting flanges and be heliarc welded to inner one structural unit. Grab bar shall comply with accessible design (including ADAAG in the U.S.A.) for structural strength.

Grab Bar shall be Model _____ (Insert model number) of Bobrick Washroom Equipment, Inc., Clifton Park, New York; Jacksonville, Tennessee; Los Angeles, California; Bobrick Washroom Equipment Company, Scarborough, Ontario; Bobrick Washroom Equipment Pty. Ltd., Australia; and Bobrick Washroom Equipment Limited, United Kingdom.

The illustrations and descriptions herein are applicable to production as of the date of this Technical Data Sheet. The manufacturer reserves the right to, and does from time to time, make changes and improvements in designs and dimensions.

B-6806 Rev. 11/11/16 ™ Printed in U.S.A.
© 2016 by Bobrick Washroom Equipment, Inc.

AMERICAN SPECIALTIES, INC.
441 Saw Mill River Road, NY 10701
(914) 476.9000 • (914) 476.0688
www.americanspecialties.com

MODEL №:	GRABBAR CONFIG
ISSUED:	09/95
REVISED:	23 FEB 2018

GRAB BAR CONFIGURATIONS (PG 1 OF 3)

TYPE -01

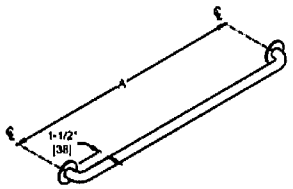

SCHEDULE			
QTY.	DIM. A	QTY.	DIM. A
	12" [305]		36" [914]
	18" [457]		42" [1067]
	24" [610]		48" [1219]
	30" [762]		

TYPE -02

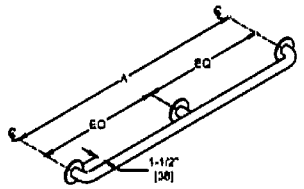

SCHEDULE	
QTY.	DIM. A
	52" [1321]
	54" [1372]
	60" [1524]
	72" [1829]

TYPE -04

LH SHOWN
RH OPPOSITE

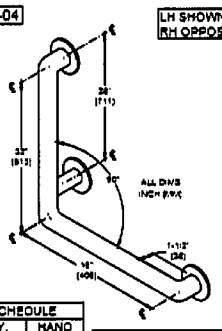

SCHEDULE	
QTY.	HAND
	LH
	RH

MODEL № MUST SPECIFY -LH OR -RH

TYPE -15

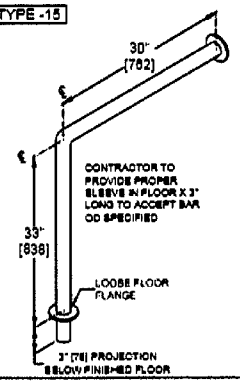

Accessory Specialties AMERICAN DISPENSER Desert Ray Products BOBRICK

THIS MANUFACTURER RESERVES THE RIGHT TO MAKE CHANGES AS SHOWN OR DISCONTINUE WITHOUT FORMAL NOTICE

AMERICAN SPECIALTIES, INC.
441 Saw Mill River Road, NY 10701
(914) 476.9000 • (914) 476.0688
www.americanspecialties.com

MODEL №:	3000
ISSUED:	01/87
REVISED:	07 Nov 2012

1" DIA (Ø25) GRAB BAR - TOWEL BAR WITH FLANGES CONCEALED MOUNTING

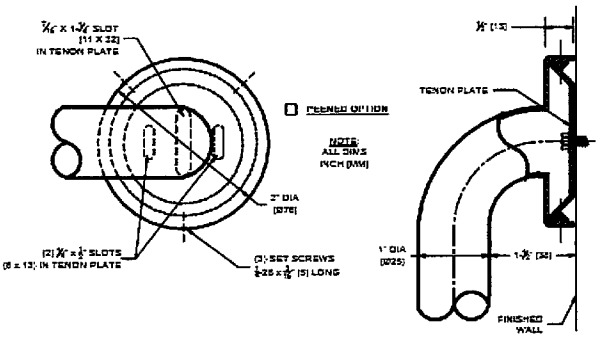

SPECIFICATION

Grab Bar-Towel Bar with Flanges for Concealed Mounting shall be type 304 stainless steel alloy 18-8. Tubing shall be 1" diameter (Ø25) x 18 gauge (1.2). Flange shall be heliarc welded to tubing with a continuous concealed bead and shall be 11 gauge (3) thick. Three (3) tamper resistant 1/4-28 stainless steel hex socket set screws shall be supplied for each flange. Mounting Tenon plates shall be fabricated of case hardened cadmium plated 13 gauge (2.3) steel. All exposed surfaces of bar shall have satin finish and be protected during shipment with a plastic bag. For optional non-slip surface add suffix –P (peened).

Grab Bar-Towel Bar with Flanges for Concealed Mounting shall be Series № 3000 of American Specialties, Inc., 441 Saw Mill River Road, Yonkers, New York 10701- 4913

STRENGTH

ASI Grab Bar-Towel Bars are designed to match the style of 3100-3200 series GB's and have similar weight capacity and strength. Mounting to the wall is a critical part of the system to meet the strength requirement. To withstand the shear, tension or pullout, and torsion loads generated by the maximum loading, the fastener system must be adequately sized.

INSTALLATION

Tenon plates are secured to wall with a 1/4" bolt (by others) through an elongated slot that provides 1" (25) vertical range and 3/16" (5) horizontal range for fitting adjustment. Flanges are then fitted over Tenon plates and secured by tightening the hex socket set screws (provided). Appropriate anchoring and backing must be provided in accordance with local building codes or as specified prior to wall finishing. Anchors are available from ASI and must be specified separately (see 3900 series).

THE MANUFACTURER RESERVES THE RIGHT TO MAKE CHANGES IN DESIGN OR DIMENSIONS WITHOUT PRIOR NOTICE

BOBRICK
Technical Data

EXTRA-HEAVY-DUTY TOWEL BARS WITH CONCEALED MOUNTING AND SNAP FLANGE

B-530

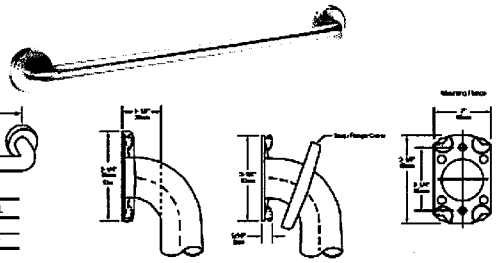

Model No.	Bar Length L
B-530 x 18	18" (455mm)
B-530 x 24	24" (610mm)

MATERIALS:

Towel Bar — 18-8, type-304, 18-gauge (1.2mm) stainless steel tubing with satin finish. 1" (25mm) outside diameter. Ends are welded to flanges. Clearance between the towel bar and wall is 1-1/2" (38mm).

Concealed Mounting Flanges — 18-8, type-304, 11-gauge (3.2mm) thick, stainless steel plate. 2" x 3-1/8" (50 x 80mm) with holes for attachment to wall.

Snap Flange Covers — 18-8, type-304, 22-gauge (0.8mm) drawn stainless steel with bright polish finish. 3-1/4" (85mm) diameter x 5/8" (16mm) deep. Each cover snaps over mounting flange to conceal mounting screws.

STRENGTH:

Towel bar will support loads in excess of 900 pounds (408-kg) if properly installed.

Caution: Towel bars are no stronger than the anchors or walls to which they are attached and, therefore, must be firmly secured in order to support the loads for which they are intended.

INSTALLATION:

Provide concealed anchor device or backing as specified or required in accordance with local building codes before wall is finished. Fasten concealed mounting flanges to anchor device or backing. Snap flange covers over each mounting flange to conceal mounting screws. Concealed anchor devices and mounting screws are not included with this towel bar and must be specified as an accessory.

Important Notes:

1. Mounting Kits — Bobrick has a selection of mounting screws and fasteners available for different types of installations; one Bobrick mounting kit is required for each flange.

Mounting Kit No.	Description
252-30	Consists of (3) #14" x 2½" (M6.3 x 64mm) type-304 stainless steel, Phillips round-head, sheet-metal screws.
2581	Consists of (3) 1/4"-20" x 3/4" (M6.3 - 1 x 19mm) type-304 stainless steel, Phillips round-head, machine screws with plated-steel toggle nuts.
2586	Consists of (2) 1/4"-20" x 1/2" (M6.3 - 1 x 51mm) type-304 stainless steel, Phillips round-head, machine screws with metal expansion shields.

2. Grab Bar Fastener — Bobrick has a grab bar fastening system that secures all Bobrick grab bar series; one Bobrick fastener is required for each flange.

Wing® Fastener No.	Description
251-4	Consists of (3) 10"-32" x 5/16" round-head, Phillips 18/8 stainless steel screws. (1) Wing® grab bar fastener.

SPECIFICATION:

Towel bar shall be type-304 stainless steel with satin finish. Towel bar shall have 18-gauge (1.2mm) wall thickness and 1" (25mm) outside diameter. Clearance between the towel bar and wall shall be 1-1/2" (38mm). Concealed mounting flanges shall be 11-gauge (3.2mm) thick stainless steel plate, 2" x 3-1/8" (50 x 80mm), and equipped with at least two screw holes for attachment to wall. Flange covers shall be 22-gauge (0.8mm) stainless steel, 3-1/4" (85mm) diameter, and shall snap over mounting flanges to conceal mounting screws. Ends of towel bar shall pass through flanges and be welded to form one structural unit.

Towel Bar shall be Model _____ (insert model number) of Bobrick Washroom Equipment, Inc., Clifton Park, New York; Jackson, Tennessee; Los Angeles, California; Bobrick Washroom Equipment Company, Scarborough, Ontario; Bobrick Washroom Equipment Pty. Ltd., Australia; and Bobrick Washroom Equipment Limited, United Kingdom.

The illustrations and descriptions herein are applicable to production as of the date of this Technical Data Sheet. The manufacturer reserves the right to, and often does, make changes and improvements in designs and dimensions.

Revised 7/29/98 SSC Printed in U.S.A.
© 2005 by Bobrick Washroom Equipment, Inc.

AMERICAN SPECIALTIES, INC.
441 Saw Mill River Road, NY 10701
(914) 476.9000 • (914) 476.0688
www.americanspecialties.com

MODEL №:	GRABBAR CONFIG
ISSUED:	09/96
REVISED:	23 FEB 2015

GRAB BAR CONFIGURATIONS (PG 1 OF 3)

TYPE -01

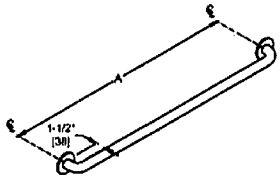

SCHEDULE			
QTY.	DIM. A	QTY.	DIM. A
	12" [305]		36" [914]
	18" [457]		42" [1067]
	24" [610]		48" [1219]
	30" [762]		

TYPE -02

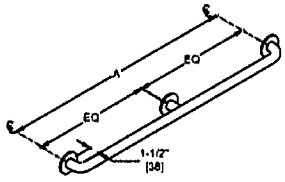

SCHEDULE	
QTY.	DIM. A
	52" [1321]
	54" [1372]
	60" [1524]
	72" [1829]

TYPE -04

LH SHOWN
RH OPPOSITE

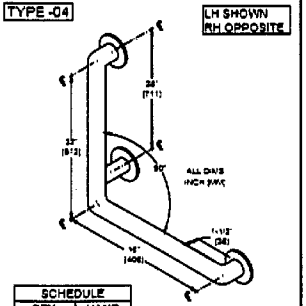

SCHEDULE	
QTY.	HAND
	LH
	RH

MODEL № MUST SPECIFY
-LH OR -RH

TYPE -15

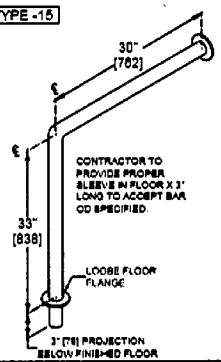

THE MANUFACTURER RESERVES THE RIGHT TO MAKE CHANGES IN DESIGN OR DIMENSIONS WITHOUT PRIOR NOTICE

BOBRICK

Technical Data

SURFACE-MOUNTED ROBE HOOK

B-7671 B-76717

Specify Model Required: ☐ Model B-7671 Bright polished stainless steel
☐ Model B-76717 Satin-finish stainless steel

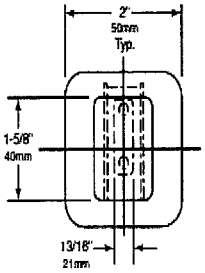

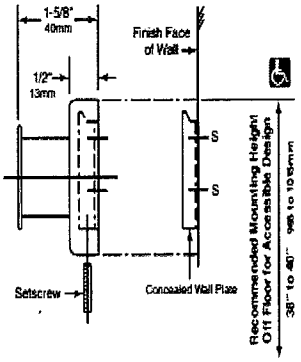

MATERIALS:

Flange & Support Arm — 18-8, type-304, 22-gauge (0.8mm) stainless steel. Concealed, 18-gauge (1.2mm) stainless steel mounting bracket. All-welded construction. Secured to wall plate with a stainless steel setscrew.

Concealed Wall Plate — 18-8, type-304, 19-gauge (1.0mm) stainless steel.

Cap — 18-8, type-304, 14-gauge (2.0mm) stainless steel. Welded to the support arm.

INSTALLATION:

To remove concealed wall plate from back of flange and mounting bracket, loosen setscrew. Mount wall plate so prongs are at top; secure with two sheet-metal screws, furnished by manufacturer, at points indicated by an S. Engage mounting bracket onto prongs of wall plate, then secure unit into position by tightening setscrew at bottom of flange.

For plaster or dry wall construction, provide concealed backing to comply with local building codes, then secure unit with sheet-metal screws furnished. For other wall surfaces, provide fiber plugs or expansion shields for use with screws furnished, or provide 1/8" (3mm) toggle bolts or expansion bolts.

For partitions with particle-board or other solid core, secure with sheet-metal screws furnished, or provide through-bolts, nuts, and washers. For hollow-core metal partitions, provide solid backing into which the furnished sheet-metal screws can be secured.

SPECIFICATION:

Surface-mounted robe hook shall be type-304 stainless steel with _____ (insert one: bright polished or satin) finish. Flange and support arm shall be 22 gauge (0.8mm) and equipped with a concealed, 18-gauge (1.2mm) mounting bracket that is secured to a concealed, 19-gauge (1.0mm) wall plate with a stainless steel setscrew. Cap shall be 14 gauge (2.0mm), welded to the support arm.

Surface-Mounted Robe Hook shall be Model _____ (insert model number) of Bobrick Washroom Equipment, Inc., Clifton Park, New York; Jackson, Tennessee; Los Angeles, California; Bobrick Washroom Equipment Company, Scarborough, Ontario; Bobrick Washroom Equipment Pty. Ltd., Australia; and Bobrick Washroom Equipment Limited, United Kingdom.

AMERICAN SPECIALTIES, INC.
441 Saw Mill River Road, Yonkers, NY 10701
(914) 476.9000 • (914) 476.0688
www.americanspecialties.com

MODEL №: 7340
ISSUED: 01/87
REVISED: 28 OCT 2016

SINGLE ROBE HOOK

☐ B= BRIGHT STAINLESS STEEL

☐ S= SATIN #4 STAINLESS STEEL

☐ W= WHITE (POWDER COATED)

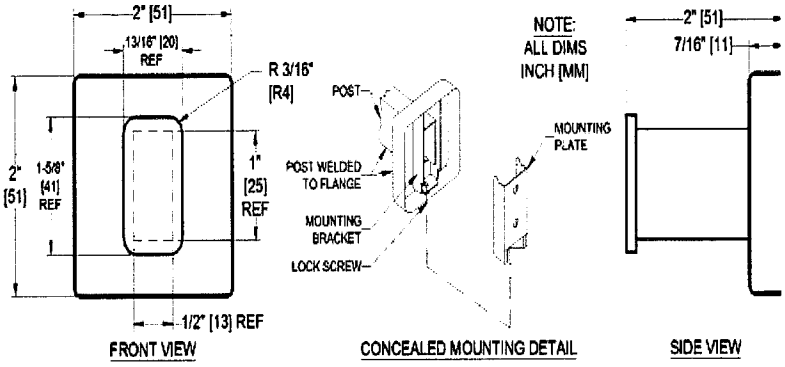

SPECIFICATION

Single Robe Hook shall be fabricated of stainless steel alloy 18-8, type 304. Post shall be 22 gauge, 1/2" x 1" [x 25] rectangular tubing with formed 22 gauge mounting flange and bracket welded on end. Cap plate shall be gauge, 3/4" x 1-1/4" [19 x 32] with radiused corners and internally welded to outer end. Mounting plate shall included and shall be 18 gauge. A stainless steel set screw shall be provided on bottom perimeter of flange to lo unit to mounting plate. Surface finish shall be bright, satin or white powder coated, as chosen by option and ind cated by code suffix.

Single Robe Hook shall be Model № 7340-____{specify surface finish code suffix} of American Specialtie Inc., 441 Saw Mill River Road, Yonkers, New York 10701-4913

INSTALLATION

Surface mount unit on door back or wall using two (2) №10 self tapping screws (by others) through holes provi ed in mounting plate into suitable prepared mountings (by others) or other suitable mounting hardware (by other to suit door or wall conditions. Hang post and flange assembly on mounting plate and tighten set screw to lock ur to plate. For compliance with ICC/ANSI A-117.1-2003 and 2010 ADA Accessibility Standards, install unit wi top of hook 48" [1219] maximum above finished floor (MAX AFF) or 46" [1168] MAX AFF if side reach acce over an obstruction (e.g. vanity) with reach depth greater than 10" [254] and less than 25" [635] is only provid or 44" [1118] MAX AFF if forward reach over an obstruction with reach depth greater than 20" [508] and le than 25" [635] is only provided. For general utility, install hook with centerline of mounting plate 68" [1727] AFF

OPERATION

Hook is suitable for a robe or clothing and small carry bags.

Accessory Specialties AMERICAN DISPENSER Desert Ray Products BOBRICK

THIS MANUFACTURER RESERVES THE RIGHT TO MAKE CHANGES IN DESIGN OR DIMENSIONS WITHOUT FORMAL NOTICE

BOBRICK

Technical Data

1½" (38mm) DIAMETER STAINLESS STEEL GRAB BARS WITH SNAP FLANGE

B-6806 SERIES

Specify Finish Required:
- ☐ Satin-finish, slip-resistant surface
- ☐ Peened surface; add suffix .99 to model number

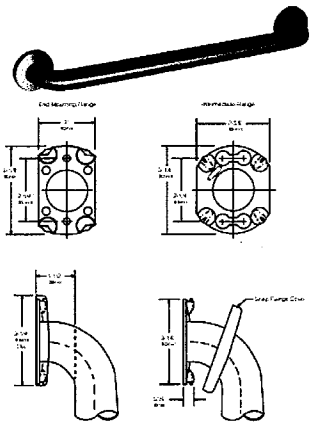

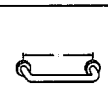

HORIZONTAL

B-6806 x 12, 18, 24, 30, 36, 42, 48

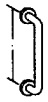

VERTICAL

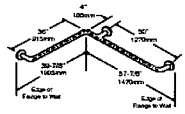

TWO-WALL WHEELCHAIR COMPARTMENT

B-68137

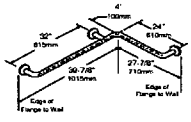

HORIZONTAL TUB / SHOWER COMPARTMENT BAR 24 x 36

B-68616

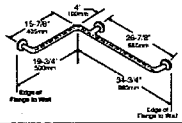

HORIZONTAL TWO-WALL BAR for Shower Stall

B-6861

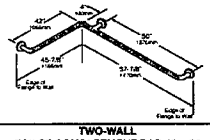

TWO-WALL TOILET COMPARTMENT BAR 42 x 54

B-6897

continued . . .

MATERIALS:

Grab Bar — 18-8 S, type-304, 18-gauge (1.2mm) stainless steel tubing with satin-finish, slip-resistant surface. 1-1/2" (38mm) outside diameter. Ends are heliarc welded to flanges. Clearance between the grab bar and wall is 1-1/2" (38mm).

Concealed Mounting Flanges — 18-8 S, type-304, 11-gauge (3.2mm) thick, stainless steel plate; end flanges 2" x 3-1/8" (50 x 80mm) with holes for attachment to wall. Intermediate flanges 2 5/8" x 5-1/8" (65 x 80mm) wide x 3-1/8" (80mm) diameter.

Snap Flange Covers — 18-8 S, type-304, 22-gauge (0.8mm) drawn stainless steel with satin-finish, 3-1/4" (85mm) diameter x 1/2" (13mm) deep. Each cover snaps over mounting flange to conceal mounting screws.

STRENGTH:

Bobrick grab bars that provide 1-1/2" (38mm) clearance from wall can support loads in excess of 900 pounds (408kg) if properly installed. Other grab bar configurations can support loads in excess of 250 pounds (113kg) if properly installed, complying with accessible design (including ADAAG in the U.S.A.) for structural strength

Safety Warning: Grab bars are no stronger than the anchors and walls to which they are attached and, therefore, must be firmly secured in order to support the loads for which they are intended. To avoid potential injury, the building owner or maintenance personnel should remove the grab bar from service if the grab bar is not adequately secured to wall or if there is any observed damage to the welds.

INSTALLATION:

Provide concealed anchor device or backing as specified or required in accordance with local building codes before wall is finished. Fasten concealed mounting flanges to anchor device or backing with at least two screws opposing each other in each flange. Snap flange covers over each mounting flange to conceal mounting screws. Concealed anchor devices and mounting screws are not included with Bobrick grab bars and must be specified as an accessory.

For Grab Bars with an Intermediate Flange(s). Pull Snap-Flange Covers away from mounting flanges. Place grab bar in desired mounting location. Use intermediate flange as a template to mark location of mounting screws at intermediate flange only. Mark screw locations at the center of the slot in the middle of the double-keyhole shaped mounting holes (2) in the intermediate flange. Remove grab bar from wall. Drive the intermediate flange mounting screws into wall at marked locations. Note: Make sure to leave a space of just over 1/8" (3.17mm) between the underside of the screw head and the wall. Install grab bar on the wall by placing the round ends of the intermediate flange double-keyhole-shaped mounting holes over the mounting screws (2) are located in the middle of the flange slots. Install the mounting screws into the wall at the end flanges and secure tightly. Tighten the mounting screws at the intermediate flange. Press all snap-flange covers into place to conceal mounting flanges.

Note: Recommend use of 1/4" or #14 sheet metal or wood screws to install Intermediate Flange. #12 screws may also be used.

Important Notes:

1. **Mounting Kits** — Bobrick offers a mounting kit for installing grab bars; **one Bobrick mounting kit is required for each flange.**

Mounting Kit No.	Description
252-30	Consists of # (3) 14 x 2½" type-304 stainless steel Phillips round-head, sheet-metal screws.

2. **Grab Bar Fastener** — Bobrick offers a grab bar fastening system that secures all Bobrick grab bar series; **one Bobrick fastener is required for each flange.** Install grab bar without backing in wall requires minimum 5/8" (16mm) thick painted or tiled drywall.

Wingit™ Fastener No.	Description
251-4	Consists of 10–32 x 5/16" round-head, Phillips 18/8 stainless steel screws. (1) Wingit grab bar fastener.

3. **Optional Anchor Device** — Bobrick grab bar anchor device includes stainless steel machine screws to be used for attaching grab bars to anchors. **one Bobrick concealed anchor device is required for each flange.**

Optional Anchor No.	Description
2583	Anchor for 3/4" to 1" (19-25mm) panel 1 anchor required for each flange.
2586	Anchor for 1/2" to 1" (13mm) panel 1 anchor required for each flange.

SPECIFICATION:

Grab bar shall be type-304 stainless steel with satin-finish, slip-resistant surface. Grab bar shall have 18-gauge (1.2mm) wall thickness and 1-1/2" (38mm) outside diameter. Clearance between the grab bar and wall shall be 1-1/2" (38mm). Concealed mounting flanges shall be 11-gauge (3.2mm) thick stainless steel plate, 2" x 3-1/8" (50 x 80mm), and equipped with at least two screw holes for attachment to wall. Flange covers shall be 22 gauge (0.8mm), 3-1/4" (85mm) diameter x 1/2" (13mm) deep, and shall snap over mounting flange to conceal mounting screws and/or Wingit fasteners. Ends of grab bar shall pass through concealed mounting flanges and be heliarc welded to form one structural unit. Grab bar shall comply with accessible design (including ADAAG in the U.S.A.) for structural strength.

Grab Bar shall be Model _____ (insert model number) of Bobrick Washroom Equipment, Inc., Clifton Park, New York; Jackson, Tennessee; Los Angeles, California; Bobrick Washroom Equipment Company, Scarborough, Ontario; Bobrick Washroom Equipment Pty. Ltd., Australia; and Bobrick Washroom Equipment Limited, United Kingdom.

ASI

AMERICAN SPECIALTIES, INC.
441 Saw Mill River Road, Yonkers, NY 10701
(914) 476.9000 • (914) 476.0688
www.americanspecialties.com

MODEL №:	3800
ISSUED:	01/87
REVISED:	7 MAR 2017

1-1/2" DIAMETER [Ø38] GRAB BAR SERIES WITH SNAP-ON FLANGE COVERS

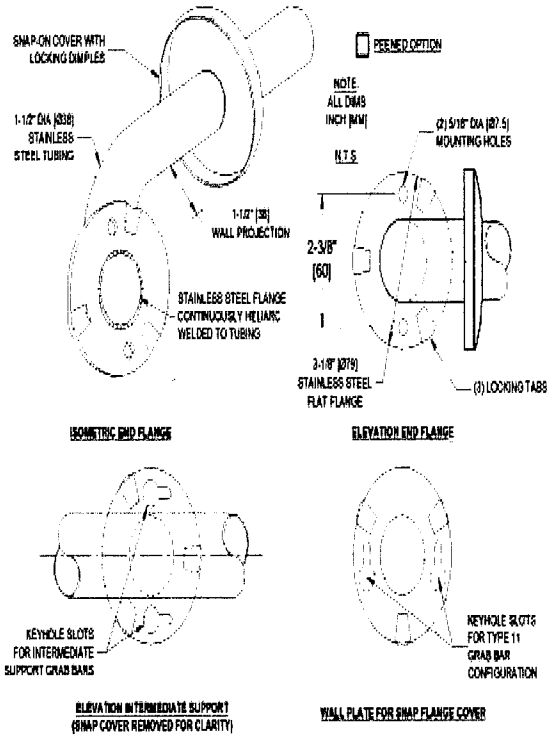

SPECIFICATION

1-1/2" Diameter [Ø38] Grab Bar with Snap-On Flange Covers for concealed mounting shall be type 304 stainless steel alloy 18-8. Tubing shall be 1-1/2" diameter [Ø38] x 18 gauge (0.048") [1.2]. Snap-on cover shall be 22 gauge (0.03") [0.8]. Flange shall be 1/8" [3] thick and shall be heliarc welded to tubing with a continuous concealed bead. End flanges shall have two (2) 5/16" diameter [Ø7.5] mounting holes. Center posts (if any) shall have (2) keyhole slots to ease installation access. All exposed surfaces shall have a satin finish and shall be protected during shipment with a plastic bag. For optional non-slip surface add suffix -P (peened).

1-1/2" Diameter [Ø38] Grab bar with Snap-On Flange Covers shall be Series № 3800 of American Specialties, Inc., 441 Saw Mill River Road, Yonkers, New York 10701-4913

STRENGTH

ASI Grab Bars are designed to meet and exceed ADA requirements as published in CABO/ANSI A117.1 and 2010 ADA Accessibility Standards. Mounting to the wall is a critical part of the system to meet this requirement. To withstand the shear, tension or pullout, and torsion loads generated by the maximum loading, the fastener system must be adequately sized.

INSTALLATION

Use grab bar as template to mark mounting holes locations and pre-drill holes. Install bar using two (2) № 10 self-tapping pan head screws and flat washers (by others) or other fastener system (by others) to suit conditions for each flange. Appropriate anchoring and backing must be provided in accordance with local building codes or as specified on Architects Plans prior to wall finishing. For compliance with 2010 ADA Accessibility Standards, install unit so that the top of the grab bar is 33" [840] minimum above finished floor (AFF) to 36" [915] maximum AFF. Anchors are available from ASI and must be specified separately for each grab bar style scheduled (see 3900 series).

MATERIALS:

Grab Bar — 18-8 S, type-304, 18-gauge (1.2mm) stainless steel tubing with satin-finish, slip-resistant surface. 1-1/2" (38mm) outside diameter. Ends are heliarc welded to flanges. Clearance between the grab bar and wall is 1-1/2" (38mm).

Concealed Mounting Flanges — 18-8 S, type-304, 11-gauge (3.2mm) thick, stainless steel plate; end flanges 2" x 3-1/8" (50 x 80mm) with holes for attachment to wall. Intermediate flanges 2-5/8" x 3-1/8" (65 x 80mm) wide x 3-1/8" (80mm) diameter.

Snap Flange Covers — 18-8 S, type-304, 22-gauge (0.8mm) drawn stainless steel with satin-finish. 3-1/4" (85mm) diameter x 1/2" (13mm) deep. Each cover snaps over mounting flange to conceal mounting screws.

STRENGTH:

Bobrick grab bars that provide 1-1/2" (38mm) clearance from wall can support loads in excess of 900 pounds (408kg) if properly installed. Other grab bar configurations can support loads in excess of 250 pounds (113kg) if properly installed, complying with accessible design (including ADAAG in the U.S.A.) for structural strength

Safety Warning: Grab bars are no stronger than the anchors and walls to which they are attached and, therefore, must be firmly secured in order to support the loads for which they are intended. To avoid potential injury, the building owner or maintenance personnel should remove the grab bar from service if the grab bar is not adequately secured to wall or if there is any observed damage to the welds.

INSTALLATION:

Provide concealed anchor device or backing as specified or required in accordance with local building codes before wall is finished. Fasten concealed mounting flanges to anchor device or backing with at least two screws opposing each other in each flange. Snap flange covers over each mounting flange to conceal mounting screws. Concealed anchor devices and mounting screws are not included with Bobrick grab bars and must be specified as an accessory.

For Grab Bars with an Intermediate Flange(s), Pull Snap-Flange Covers away from mounting flanges. Place grab bar in desired mounting location. Use intermediate flange as a template to mark location of mounting screws at intermediate flange only. Mark screw locations at the center of the slot in the middle of the double-keyhole shaped mounting holes (2) in the intermediate flange. Remove grab bar from wall. Drive the intermediate flange mounting screws into wall at marked locations. Note: Make sure to leave a space of just over 1/8" (3.17mm) between the underside of the screw head and the wall. Install grab bar on the wall by placing the round ends of the intermediate flange double-keyhole shaped mounting holes over the mounting screws (2) are located in the middle of the flange slots. Install the mounting screws into the wall at the end flanges and secure tightly. Tighten the mounting screws at the intermediate flange. Press all snap-flange covers into place to conceal mounting flanges.

Note: Recommend use of 1/4" or #14 sheet metal or wood screws to install Intermediate Flange. #12 screws may also be used.

Important Notes:

1. **Mounting Kits** — Bobrick offers a mounting kit for installing grab bars; **one Bobrick mounting kit is required for each flange.**

Mounting Kit No.	Description
252-30	Consists of # (3) 14 x 2½" type-304 stainless steel Phillips round-head, sheet-metal screws.

2. **Grab Bar Fastener** — Bobrick offers a grab bar fastening system that secures all Bobrick grab bar series; **one Bobrick fastener is required for each flange.** Install grab bar without backing in wall requires minimum 5/8" (16mm) thick painted or tiled drywall.

Wingit™ Fastener No.	Description
251-4	Consists of 10–32 x 5/16" round-head, Phillips 18/8 stainless steel screws. (1) Wingit grab bar fastener.

3. **Optional Anchor Device** — Bobrick grab bar anchor device includes stainless steel machine screws to be used for attaching grab bars to anchors. **one Bobrick concealed anchor device is required for each flange.**

Optional Anchor No.	Description
2583	Anchor for 3/4" to 1" (19-25mm) panel 1 anchor required for each flange.
2586	Anchor for 1/2" to 1" (13mm) panel 1 anchor required for each flange.

SPECIFICATION:

Grab bar shall be type-304 stainless steel with satin-finish, slip-resistant surface. Grab bar shall have 18-gauge (1.2mm) wall thickness and 1-1/2" (38mm) outside diameter. Clearance between the grab bar and wall shall be 1-1/2" (38mm). Concealed mounting flanges shall be 11-gauge (3.2mm) thick stainless steel plate, 2" x 3-1/8" (50 x 80mm), and equipped with at least two screw holes for attachment to wall. Flange covers shall be 22 gauge (0.8mm), 3-1/4" (85mm) diameter x 1/2" (13mm) deep, and shall snap over mounting flange to conceal mounting screws and/or Wingit fasteners. Ends of grab bar shall pass through concealed mounting flanges and be heliarc welded to form one structural unit. Grab bar shall comply with accessible design (including ADAAG in the U.S.A.) for structural strength.

Grab Bar shall be Model _____ (insert model number) of Bobrick Washroom Equipment, Inc., Clifton Park, New York; Jackson, Tennessee; Los Angeles, California; Bobrick Washroom Equipment Company, Scarborough, Ontario; Bobrick Washroom Equipment Pty. Ltd., Australia; and Bobrick Washroom Equipment Limited, United Kingdom.

AMERICAN SPECIALTIES, INC.
441 Saw Mill River Road, Yonkers, NY 10701
(914) 476.9000 • (914) 476.0688
www.americanspecialties.com

MODEL №:	**3800**
ISSUED:	01/87
REVISED:	7 MAR 2017

1-1/2" DIAMETER [Ø38] GRAB BAR SERIES WITH SNAP-ON FLANGE COVERS

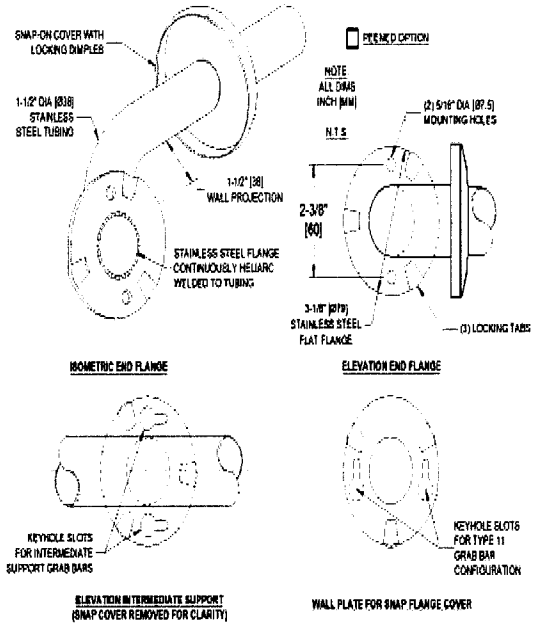

SPECIFICATION

1-1/2" Diameter [Ø38] Grab Bar with Snap-On Flange Covers for concealed mounting shall be type 304 stainless steel alloy 18-8. Tubing shall be 1-1/2" diameter [Ø38] x 18 gauge (0.048") [1.2]. Snap-on cover shall be 22 gauge (0.03") [0.8]. Flange shall be 1/8" [3] thick and shall be heliarc welded to tubing with a continuous concealed bead. End flanges shall have two (2) 5/16" diameter [Ø7.5] mounting holes. Center posts (if any) shall have (2) keyhole slots to ease installation access. All exposed surfaces shall have a satin finish and shall be protected during shipment with a plastic bag. For optional non-slip surface add suffix **–P** (peened).

1-1/2" Diameter [Ø38] Grab bar with Snap-On Flange Covers shall be Series № 3800 of American Specialties, Inc., 441 Saw Mill River Road, Yonkers, New York 10701-4913

STRENGTH

ASI Grab Bars are designed to meet and exceed ADA requirements as published in CABO/ANSI A117.1 and 2010 ADA Accessibility Standards. Mounting to the wall is a critical part of the system to meet this requirement. To withstand the shear, tension or pullout, and torsion loads generated by the maximum loading, the fastener system must be adequately sized.

INSTALLATION

Use grab bar as template to mark mounting holes locations and pre-drill holes. Install bar using two (2) № 10 self-tapping pan head screws and flat washers (by others) or other fastener system (by others) to suit conditions for each flange. Appropriate anchoring and backing must be provided in accordance with local building codes or as specified on Architects Plans prior to wall finishing. For compliance with 2010 ADA Accessibility Standards, iostall unit so that the top of the grab bar is 33" [840] minimum above finished floor (AFF) to 36" [915] maximum AFF. Anchors are available from ASI and must be specified separately for each grab bar style scheduled (see 3900 series).

BOBRICK

Technical Data

1½" (38mm) DIAMETER STAINLESS STEEL GRAB BARS WITH SNAP FLANGE

B-6806 SERIES

Specify Finish Required: ☐ Satin-finish, slip-resistant surface
☐ Peened surface: add suffix .99 to model number

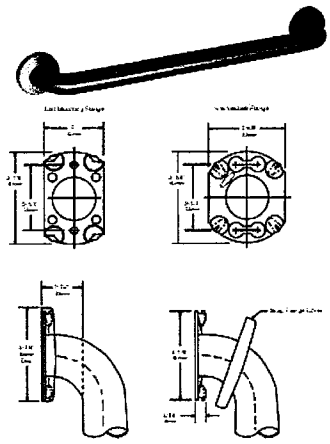

HORIZONTAL	VERTICAL	TWO-WALL WHEELCHAIR COMPARTMENT
B-6806 x 12, 18, 24, 30, 36, 42, 48		B-6813?

HORIZONTAL TUB / SHOWER COMPARTMENT BAR 24 x 36	HORIZONTAL TWO-WALL BAR for Shower Stall	TWO-WALL TOILET COMPARTMENT BAR 42 x 54
B-6861?	B-6861	B-6897

continued . . .

MATERIALS:

Grab Bar — 18-8 S. type-304, 18-gauge (1.2mm) stainless steel tubing with satin-finish, slip-resistant surface. 1-1/2" (38mm) outside diameter. Ends are heliarc welded to flanges. Clearance between the grab bar and wall is 1-1/2" (38mm).

Concealed Mounting Flanges — 18-8 S. type-304, 11-gauge (3.2mm) thick, stainless steel plate; end flanges 2" x 3-1/8" (50 x 80mm) with holes for attachment to wall. Intermediate flanges 2-5/8" x 3-1/8" (65 x 80mm) wide x 3-1/8" (80mm) diameter.

Snap Flange Covers — 18-8 S. type-304, 22-gauge (0.8mm) drawn stainless steel with satin-finish, 3-1/4" (85mm) diameter x 1/2" (13mm) deep. Each cover snaps over mounting flange to conceal mounting screws.

STRENGTH:

Bobrick grab bars that provide 1-1/2" (38mm) clearance from wall can support loads in excess of 900 pounds (408kg) if properly installed. Other grab bar configurations can support loads in excess of 250 pounds (113kg) if properly installed, complying with accessible design (including ADAAG in the U.S.A.) for structural strength.

Safety Warning: Grab bars are no stronger than the anchors and walls to which they are attached and, therefore, must be firmly secured in order to support the loads for which they are intended. To avoid potential injury, the building owner or maintenance personnel should remove the grab bar from service if the grab bar is not adequately secured to wall or if there is any observed damage to the welds.

INSTALLATION:

Provide concealed anchor device or backing as specified or required in accordance with local building codes before wall is finished. Fasten concealed mounting flanges to anchor device or backing with at least two screws opposing each other in each flange. Snap flange covers over each mounting flange to conceal mounting screws. Concealed anchor devices and mounting screws are not included with Bobrick grab bars and must be specified as an accessory.

For Grab Bars with an Intermediate Flange(s), Pull Snap-Flange Covers away from mounting flanges. Place grab bar in desired mounting location. Use intermediate flange as a template to mark location of mounting screws at intermediate flange only. Mark screw locations at the center of the slot in the middle of the double-keyhole shaped mounting holes (2) in the intermediate flange. Remove grab bar from wall. Drive the intermediate flange mounting screws into wall at marked locations. Note: Make sure to leave a space of just over 1/8" (3.17mm) between the underside of the screw head and the wall. Install grab bar on the wall by placing the round ends of the intermediate flange double-keyhole shaped mounting holes over the mounting screws (2) are located in the middle of the flange slots. Install the mounting screws into the wall at the end flanges and secure tightly. Tighten the mounting screws at the intermediate flange. Press all snap-flange covers into place to conceal mounting flanges.

Note: Recommend use of 1/4" or #14 sheet metal or wood screws to install Intermediate Flange. #12 screws may also be used.

Important Notes:

1. **Mounting Kits** — Bobrick offers a mounting kit for installing grab bars; **one Bobrick mounting kit is required for each flange.**

Mounting Kit No.	Description
252-30	Consists of # (3) 14 x 2½" type-304 stainless steel, Phillips round-head, sheet-metal screws.

2. **Grab Bar Fastener** — Bobrick offers a grab bar fastening system that secures all Bobrick grab bar series; **one Bobrick fastener is required for each flange.** Install grab bar without backing in wall requires minimum 5/8" (16mm) thick painted or tiled drywall.

Wingit™ Fastener No.	Description
251-4	Consists of 10-32 x 5/16" round-head, Phillips 18-8 stainless steel screws. (1) Wingit grab bar fastener.

3. **Optional Anchor Device** — Bobrick grab bar anchor device includes stainless steel machine screws to be used for attaching grab bars to anchors. **one Bobrick concealed anchor device is required for each flange.**

Optional Anchor No.	Description
2583	Anchor for 3/4" to 1" (19-25mm) panel 1 anchor required for each flange.
2586	Anchor for 1/2" to 1" (13mm) panel 1 anchor required for each flange.

SPECIFICATION:

Grab bar shall be type-304 stainless steel with satin-finish, slip-resistant surface. Grab bar shall have 18-gauge (1.2mm) wall thickness and 1-1/2" (38mm) outside diameter. Clearance between the grab bar and wall shall be 1-1/2" (38mm). Concealed mounting flanges shall be 11-gauge (3.2mm) thick stainless steel plate, 2" x 3-1/8" (50 x 80mm), and equipped with at least two screw holes for attachment to wall. Flange covers shall be 22 gauge (0.8mm), 3-1/4" (85mm) diameter x 1/2" (13mm) deep, and shall snap over mounting flange to conceal mounting screws and/or Wingit fasteners. Ends of grab bar shall pass through concealed mounting flanges and be heliarc welded to form one structural unit. Grab bar shall comply with accessible design (including ADAAG in the U.S.A.) for structural strength.

Grab Bar shall be Model _____ (insert model number) of Bobrick Washroom Equipment, Inc., Clifton Park, New York; Jackson, Tennessee; Los Angeles, California; Bobrick Washroom Equipment Company, Scarborough, Ontario; Bobrick Washroom Equipment Pty. Ltd., Australia; and Bobrick Washroom Equipment Limited, United Kingdom.

AMERICAN SPECIALTIES, INC.
441 Saw Mill River Road, NY 10701
(914) 476.9000 • (914) 476.0688
www.americanspecialties.com

MODEL №:	GRABBAR CONFIG
ISSUED:	09/96
REVISED:	23 FEB 2015

GRAB BAR CONFIGURATIONS (PG 3 OF 3)

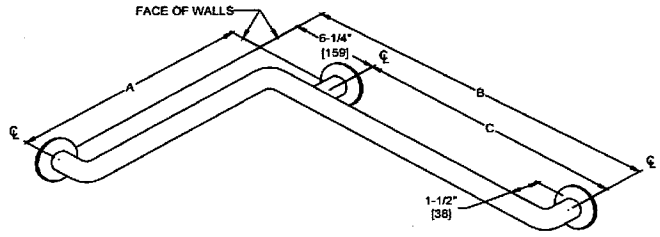

SCHEDULE				
QTY	TYPE	A	B	C
	50	24" [610]	36" [914]	29-3/4" [756]
	56	36" [914]	54" [1372]	47-3/4" [1213]
	57	42" [1069]	54" [1372]	47-3/4" [1213]
	60	18" [457]	30" [762]	23-3/4" [603]
	74	18-1/8" [460]	33-1/8" [841]	26-7/8" [683]

OPTION –25

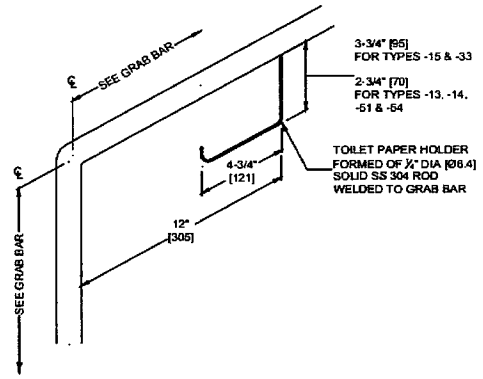

Option -25 Toilet Paper Holder is welded on to Grab Bars of the Swing Up or Swing Away configurations 3413, 3451, 3454 and Fixed Types -15, -33

Accessory Specialties AMERICAN DISPENSER Desert Ray Products BOBROLS.inc

AMERICAN SPECIALTIES, INC.
441 Saw Mill River Road, Yonkers, NY 10701
(914) 476.9000 • (914) 476.0688
www.americanspecialties.com

MODEL №:	3800
ISSUED:	01/87
REVISED:	7 MAR 2017

1-1/2" DIAMETER [Ø38] GRAB BAR SERIES WITH SNAP-ON FLANGE COVERS

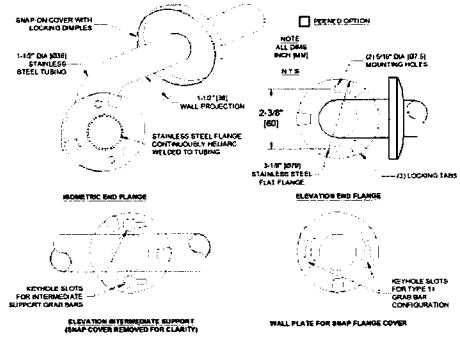

SPECIFICATION

1-1/2" Diameter [Ø38] Grab Bar with Snap-On Flange Covers for concealed mounting shall be type 304 stainless steel alloy 18-8. Tubing shall be 1-1/2" diameter [Ø38] x 18 gauge (0.048") [1.2]. Snap-on cover shall be 22 gauge (0.03") [0.8]. Flange shall be 1/8" [3] thick and shall be heliarc welded to tubing with a continuous concealed bead. End flanges shall have two (2) 5/16" diameter [Ø7.5] mounting holes. Center posts (if any) shall have (2) keyhole slots to ease installation access. All exposed surfaces shall have a satin finish and shall be protected during shipment with a plastic bag. For optional non-slip surface add suffix –P (peened).

1-1/2" Diameter [Ø38] Grab bar with Snap-On Flange Covers shall be Series № 3800 of American Specialties, Inc., 441 Saw Mill River Road, Yonkers, New York 10701- 4913

STRENGTH

ASI Grab Bars are designed to meet and exceed ADA requirements as published in CABO/ANSI A117.1 and 2010 ADA Accessibility Standards. Mounting to the wall is a critical part of the system to meet this requirement. To withstand the shear, tension or pullout, and torsion loads generated by the maximum loading, the fastener system must be adequately sized.

INSTALLATION

Use grab bar as template to mark mounting holes locations and pre-drill holes. Install bar using two (2) № 10 self-tapping pan head screws and flat washers (by others) or other fastener system (by others) to suit conditions for each flange. Appropriate anchoring and backing must be provided in accordance with local building codes or as specified on Architects Plans prior to wall finishing. For compliance with 2010 ADA Accessibility Standards, install unit so that the top of the grab bar is 33" [840] minimum above finished floor (AFF) to 36" [915] maximum AFF. Anchors are available from ASI and must be specified separately for each grab bar style scheduled (see 3900 series).

Accessory Specialties AMERICAN DISPENSER Desert Ray Products BOBROLS.inc

BOBRICK

Technical Data

SURFACE-MOUNTED TOWEL PIN

B-677 B-6777

Specify Model Required: ☐ Model B-677 Bright polished stainless steel
☐ Model B-6777 Satin-finish stainless steel

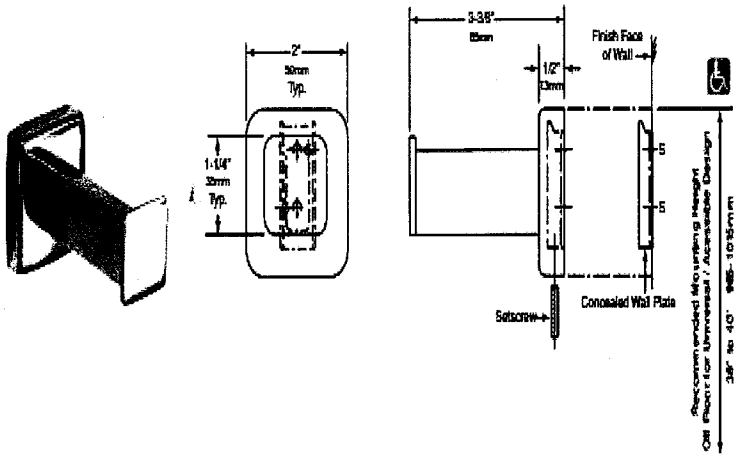

MATERIALS:

Flange and Support Arm — 18-8, type-304, 22-gauge (0.8mm) stainless steel. Concealed, 16-gauge (1.6mm) stainless steel mounting bracket. All-welded construction. Secured to wall plate with a stainless steel setscrew.

Concealed Wall Plate — 18-8, type-304, 16-gauge (1.6mm) stainless steel.

Cap — 18-8, type-301, 10-gauge (3.6mm) stainless steel. Welded to the support arm.

INSTALLATION:

To remove concealed wall plate from back of flange and mounting bracket, loosen setscrew. Mount wall plate so prongs are at top; secure with two sheet-metal screws, furnished by manufacturer, at points indicated by an *S*. Engage mounting bracket onto prongs of wall plate, then secure into position by tightening setscrew at bottom of flange.

For partitions with particle-board or other solid core, secure with sheet-metal screws furnished, or provide through-bolts, nuts, and washers.

For hollow-core metal partitions, provide solid backing ioto which the furnished sheet-metal screws can be secured.

For plaster or dry wall construction, provide concealed backing to comply with local building codes, then secure unit with sheet-metal screws furnished.

For other wall surfaces, provide fiber plugs or expansion shields for use with sheet-metal screws furnished, or provide 1/8" (3mm) toggle bolts or expansion bolts.

SPECIFICATION:

Surface-mounted towel pin shall be type-304 stainless steel with _____ (insert one: bright polished or satin) finish. Flange and support arm shall be 22 gauge (0.8mm) and equipped with a concealed, 16-gauge (1.6mm) mounting bracket that is secured to a concealed, 16-gauge (1.6mm) wall plate with a stainless steel setscrew. Cap shall be 10 gauge (3.6mm), welded to the support arm.

Surface-Mounted Towel Pin shall be Model _____ (insert model number) of Bobrick Washroom Equipment, Inc., Clifton Park, New York; Jackson, Tennessee; Los Angeles, California; Bobrick Washroom Equipment Company, Scarborough, Ontario; Bobrick Washroom Equipmeot Pty. Ltd., Australia; and Bobrick Washroom Equipment Limited, United Kingdom.

AMERICAN SPECIALTIES, INC.
441 Saw Mill River Road, Yonkers, NY 10701 (914) 476-9000
www.americanspecialties.com

MODEL No.	7301
ISSUED:	1-87
REVISED:	1-06

TOWEL PIN

Specify Finish Required → ☐ -B = Bright Stainless Steel
☐ -S = Satin #4 Stainless Steel

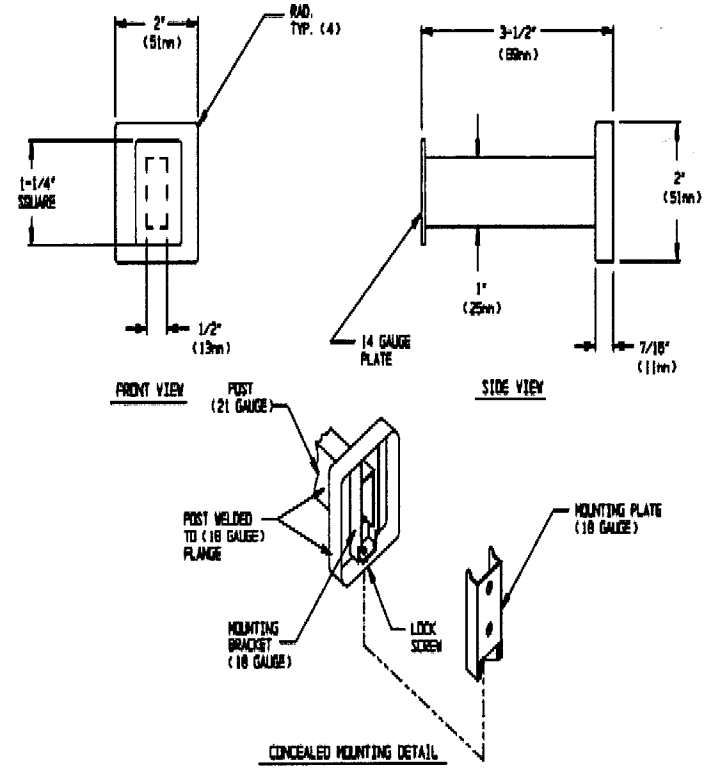

SPECIFICATION

Towel Pin unit shall be fabricated of stainless steel alloy 18-8, type 304. Pin post shall be 1/2" x 1" (13mm x 25mm) rectangular tubing with formed mounting flange and bracket welded on end. Cap plate shall be 3/4" x 1-1/2" (19mm x 38mm) welded to outer end. Mounting plate shall be included and shall be 18 gauge. A stainless steel setscrew shall be provided on bottom perimeter of flange to lock unit to mounting plate. Surface finish shall be bright or satin as chosen by option and indicated by code suffix.

Towel Pio unit shall be Model №7301-B or №7301-S of Americao Specialties, Inc., 441 Saw Mill River Road, Yookers, New York 10701-4913

INSTALLATION

Surface mount unit on door or wall using №10 self tapping screws (by others) through holes provided in mounting plate into suitable prepared mountings (by others) or other suitable mounting hardware (by others) to suit door or wall conditions. Hang post and flange assembly on mounting plate and tighten setscrew to lock unit to plate. For compliance with ICC/ANSI A-117.1-2003 and ADA Accessibility Guidelines install unit with top of towel pin 48" (1219mm) maximum above finished floor (MAX AFF) if clear floor forward reach or if clear floor side reach access only is provided or 46" (1168mm) MAX AFF if side reach access over an obstruction (e.g. vanity) with reach depth greater than 10" (254mm) and less than 25" (635mm) is only provided or 44" (1118mm) MAX AFF if forward reach over an obstruction with reach depth greater than 20" (508mm) and less than 25" (635mm) is only provided. For general utility install pin with centerline of mounting plate between 55" and 68" (1397mm to 1727mm) AFF.

BOBRICK

Technical Data

ClassicSeries® EXTRA-HEAVY-DUTY SHOWER CURTAIN ROD

B-6047

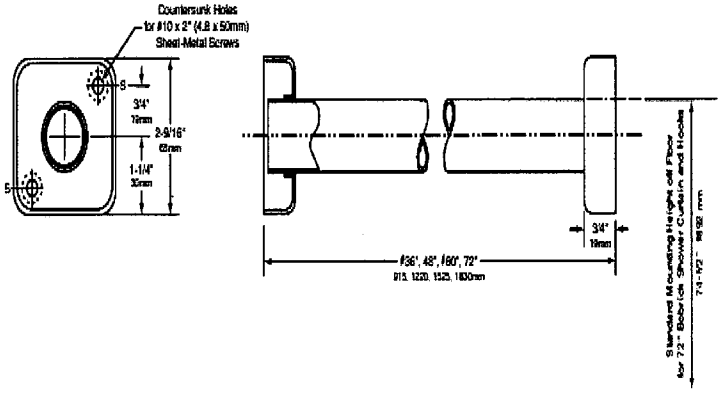

MATERIALS:

Curtain Rod — 18-8, Type-304, 18-gauge (1.2mm) stainless steel tubing with satin finish. 1-1/4" (32mm) outside diameter. Available io lengths from 36" (915mm) up to 72" (1830mm).

Flanges — 18-8, Type-304, 20-gauge (1.0mm) stainless steel with satin finish. One-piece, die-formed.

INSTALLATION:

Slide flanges onto curtain rod. Position flanges against wall and secure with #10 x 2" (M4.8 x 50mm) Phillips oval-head, stainless steel, sheet-metal screws, furnished by manufacturer, at points indicated by an *S*. For plaster or dry wall constructioo, provide coocealed backing to comply with local building codes, then secure flanges with sheet-metal screws furnished. For other wall surfaces, provide fiber plugs or expansioo shields for use with sheet-metal screws furoished, or provide 1/8" (3mm) toggle bolts or expansion bolts.

SPECIFICATION:

Shower curtain rod shall be Type-304, 18-gauge (1.2mm) stainless steel with satin finish and have outside diameter of 1-1/4" (30mm). Ooe-piece, die-formed flanges shall be Type-304, 20-gauge (1.0mm) stainless steel with satin finish.

Shower Curtain Rod shall be Model B-6047 x _____ (insert length) of Bobrick Washroom Equipment, Inc., Clifton Park, New York; Jackson, Tennessee; Los Angeles, California; Bobrick Washroom Equipment Company, Scarborough, Ontario; Bobrick Washroom Equipment Pty. Ltd., Australia; and Bobrick Washroom Equipment Limited, United Kingdom.

ASI

AMERICAN SPECIALTIES, INC.

441 Saw Mill River Road, Yonkers, NY 10701 (914) 476-9000

MODEL No.	1204
ISSUED.	1-87
REVISED:	9-04

EXTRA-HEAVY DUTY SHOWER CURTAIN ROD

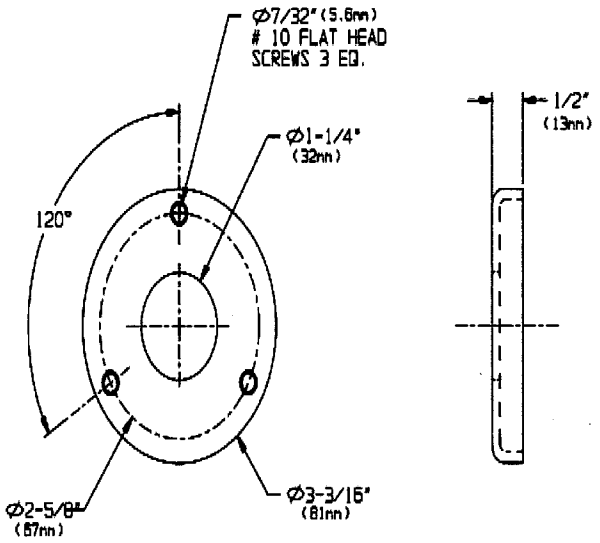

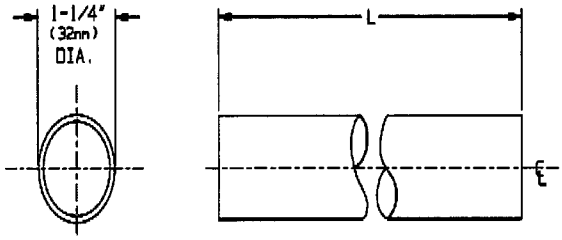

SPECIFICATION

Extra-Heavy-Duty Sbower Curtain Rod with flanges shall be fabricated of alloy 18-8 stainless steel, type 304. Tubing shall be 18 gauge, 1-1/4"O.D. with a satin finish and shall be protected during shipment with a plastic bag. Length shall be as specified. Flanges shall be fabricated of 20ga. stainless steel with a satin finish. Flanges shall have (3) countersunk 13/64" (5.2mm) dia. holes to accept #10 flat or oval head screws furnished by others.

Extra-Heavy-Duty Shower Curtain Rod with Exposed Muunting Flaoges shall be Model N: 1204- XXX as maoufactured by Americao Specialties, Inc., 441 Saw Mill River Road, Yonkers, New York 10701-4913

ORDERING NOTE

Select length in inches (i.e. 048, 060, 120) to create Part Spec Order Number (i.e. 1204- 060).

INSTALLATION

Rod is installed in straight section between two (2) mounting flanges. Rods longer than 72" (1829mm) require ceiling hanger Model N: 1204-C. For use with standard shower curtain model N#'s 1200 or 1200-V having 72" (1829mm) length and standard hooks Model N:1200-SHU unit should be installed with rod centerline 74-1/2" (1892mm) AFF or 67" (1702mm) above tub rim to obtain 6" (152mm) bottom overlap.

Accessory Specialties AMERICAN DISPENSER Desert Ray Products BOBRICK

BOBRICK

Technical Data

SOLID PHENOLIC FOLDING SHOWER/DRESSING AREA SEAT

B-5193

AMERICAN SPECIALTIES, INC.
441 Saw Mill River Road, Yonkers, NY 10701
(914) 476.9000 • (914) 476.0688
www.americanspecialties.com

MODEL №: 8203-28
ISSUED: 07/2014
REVISED: 2 July 2014

RECTANGULAR PHENOLIC FOLD-UP SHOWER SEAT (pg 1 of 2)

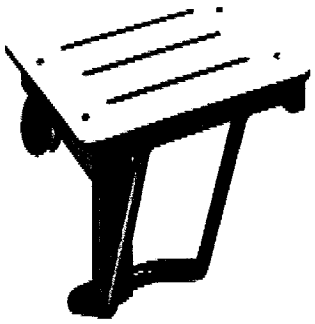

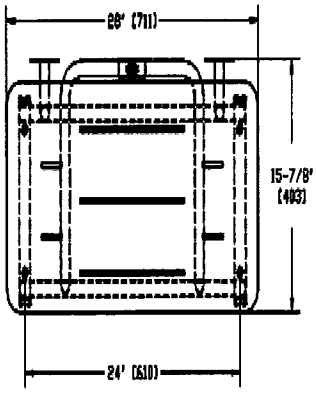

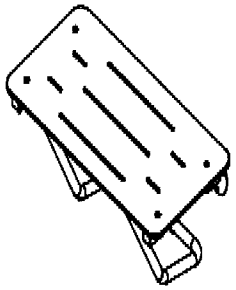

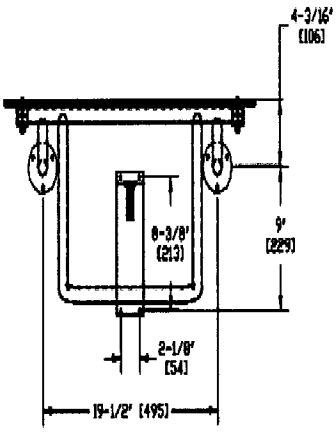

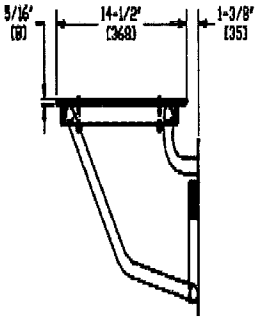

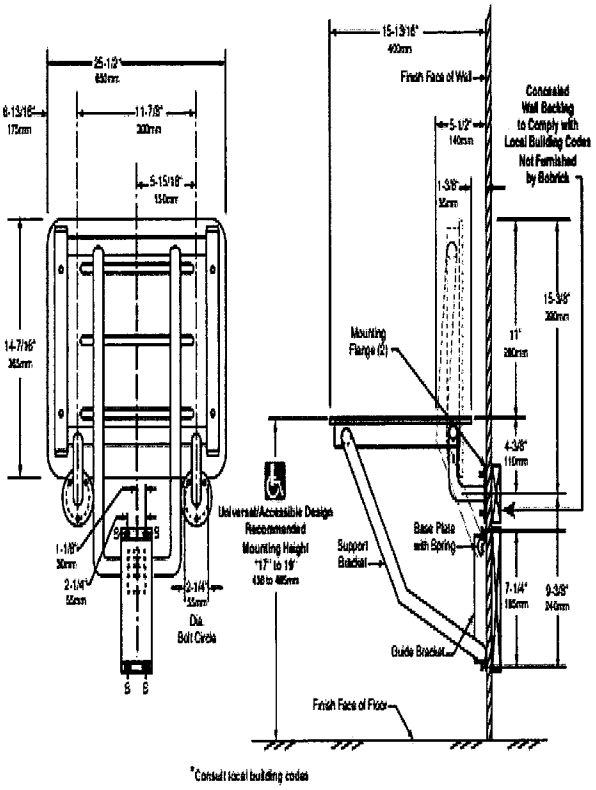

*Consult local building codes

MATERIALS:

Seat — One-piece, 5/16" (8mm) thick, solidly fused plastic laminate with matte-finish melamine surfaces, ivory-colored face sheets, and black phenolic resin core that are integrally bonded — cannot delaminate. Integral slots for water drainage. Secured to frame with stainless steel carriage bolts and acorn nuts.

Frame — 18-8, Type-304, stainless steel with satin finish. 16-gauge (1.6mm), 1-1/4" (30mm) square tubing and 18-gauge (1.2mm), 1" (25mm) diameter seamless tubing.

Mounting Flanges (2) — 18-8, Type-304, 3/16" (5mm) thick stainless steel with satin finish. 3" (75mm) diameter with three mounting screw holes.

Baseplate — 18-8, Type-304, heavy-gauge stainless steel.

Spring — 17-7, Type-301, 24-gauge (0.6mm) stainless steel. Spot-welded to baseplate.

Guide Bracket — 18-8, Type-304, 16-gauge (1.6mm) stainless steel with satin finish.

continued…

SPECIFICATION

Phenolic Fold -Up Shower Seat shall have all metal parts fabricated from alloy 18-8 stainless steel, type 304; seat frame and support legs shall be 1" diameter (Ø25) and 1-1/4" (32) square x 18 gauge (1.2) with 3/16" (4.8) mounting flanges and 16 gauge (1.5) guide bracket/arm support. All exposed surfaces shall have satin finish. Seat shall be 5/16" (8) thick phenolic with white color top and bottom surfaces and shall have black edges. Structural assembly shall be of welded construction and all exposed edges and corners shall be radiused and/or deburred. Support arm shall fold up when in retracted position to provide low profile against wall. No extra fittings shall be required to retain seat in storage position. Guide bracket shall control seat lowering into operating position. Unit shall satisfy 2010 Accessibility Standards when mounted properly.

Phenolic Fold-up Shower Seat shall be Model № 8203-28 as manufactured by American Specialties, Inc., 441 Saw Mill River Road, Yonkers, NY 10701-4913

INSTALLATION

This unit is surface mounted. Installer/construction contractor must provide concealed anchor plate or blocking as specified in construction documents or as required by local building codes prior to wall finishing. Fasten unit flanges and guide bracket to concealed anchor or blocking plate with appropriate hardware. See "STRENGTH" section below. Note that concealed mounting plates or anchors and hardware are not supplied with this product and must be specified separately. Ensure that mounting configuration complies with local building codes.

BOBRICK

Technical Data

REVERSIBLE SOLID PHENOLIC FOLDING SHOWER SEAT

B-5181

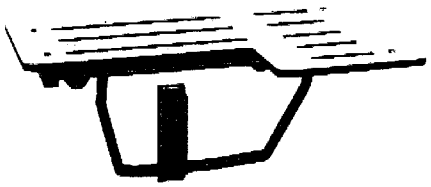

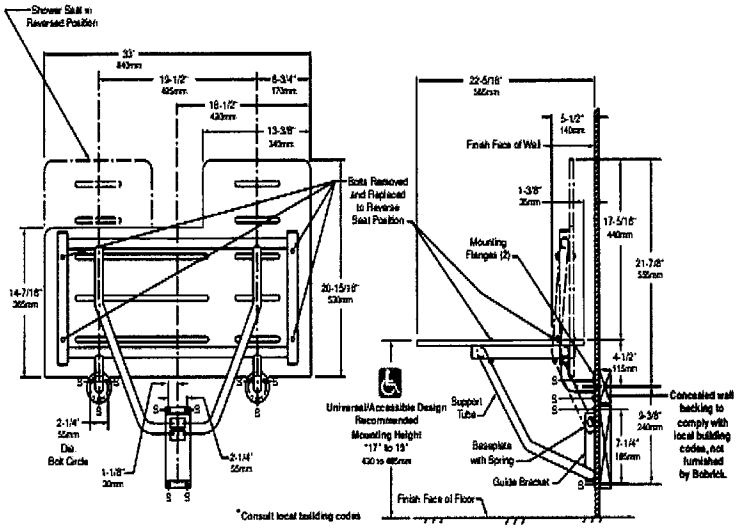

Left-Hand Seat Shown

MATERIALS:

Seat — One-piece, 1/2" (13mm) thick, solid phenolic with matte-finish, antique white-colored, melamine surfaces and black phenolic-resin core — cannot delaminate. Integral slots for water drainage. Secured to frame with stainless steel carriage bolts and acorn nuts. Reversible for left- or right-hand installation in the field.

Frame — 18-8, Type-304, stainless steel with satin finish. 16-gauge (1.6mm), 1-1/4" (30mm) square tubing and 18-gauge (1.2mm), 1" (25mm) diameter seamless tubing.

Mounting Flanges (2) — 18-8, Type-304, 3/16" (5mm) thick stainless steel with satin finish. 3" (75mm) diameter with three mounting screw holes.

Baseplate — 18-8, Type-304, heavy-gauge stainless steel.

Spring — 17-7, Type-301, 24-gauge (0.6mm) stainless steel. Spot-welded to baseplate.

Guide Bracket — 18-8, Type-304, 16-gauge (1.6mm) stainless steel with satin finish.

continued . . .

AMERICAN SPECIALTIES, INC.
441 Saw Mill River Road, Yonkers, NY 10701
(914) 476.9000 • (914) 476.0688
www.americanspecialties.com

MODEL №:	8206
ISSUED:	05 JAN 1987
REVISED:	12 SEP 2019

L-SHAPED PHENOLIC FOLD-UP SHOWER STALL SEAT (Pg 1 of 2)

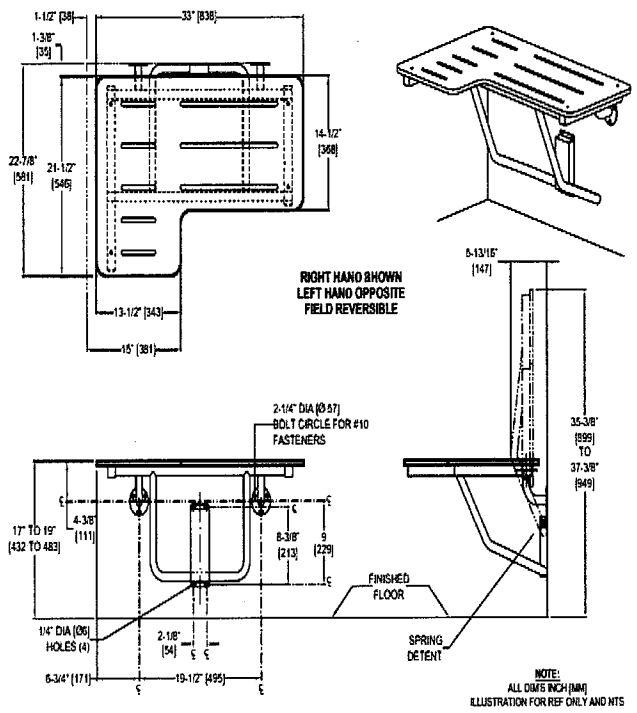

SPECIFICATION

L-shaped Phenolic Fold-up Shower Stall Seat shall have all metal parts fabricated of 18-8 alloy type 304 stainless steel. Seat frame and support legs shall be 1" diameter [Ø25] and 1-1/4" [32] square x 18 gauge [1,2] with 3/16" [4,8] thick mounting flanges and 16 gauge [1,5] guide bracket/arm support. All exposed surfaces shall have satin finish. Structural assembly shall be of welded construction and all exposed edges and corners shall be radiused and/or deburred. Seat shall be solid phenolic with white color top and bottom surfaces and shall have black edges. Support arm shall fold up when in retracted position to provide low profile against wall. No extra fittings shall be required to retain seat in storage position. Guide bracket shall control seat lowering into operating position. Unit shall satisfy 2010 ADA Accessibility Standards when mounted properly.

L-shaped Phenolic Fold-up Shower Stall Seat shall be Model № 8206-___ (R for right hand or L for left hand) of American Specialties, Inc., 441 Saw Mill River Road, Yonkers, New York 10701-4913

INSTALLATION

This unit is surface mounted. Installer/construction contractor must provide concealed anchor plate or blocking as specified in construction documents or as required by local building codes prior to wall finishing. Fasten unit flanges and guide bracket to concealed anchor or blocking plate with appropriate hardware. See "STRENGTH" section below. Note that concealed mounting plates or anchors and hardware are not supplied with this product and must be specified separately. Ensure that mounting configuration complies with local building codes. Unit is reversible in the field for right or left hand installation.

OPERATION:

Electronic sensor automatically dispenses towel when hands are placed under the towel opening. Intuitive LED light directs patrons to dispense area. Dispenses universal, 1-1/2" to 2" (38 to 51mm) diameter core, up to 8" (205mm) diameter, 8" (205mm) wide non-perforated, non-proprietary rolls. LED light at the towel opening flashes green when dispenser is ready to dispense, flashes orange, indicating low battery, flashes red if not ready to dispense or in need of service. Towel length can be set to 9" (230mm), 12" (305mm), 15" (380mm). Optional "Paper Saver" feature allows a shorter second sheet to dispense immediately after the first sheet. The "Paper Saver" feature has two second sheet length options: 25% shorter sheet length or 12.5% shorter sheet length. The battery pack power source holds 4 "D" size alkaline batteries (not furnished). Dispenser includes a 3-1/2" (90mm) diameter stub roll feature. When the stub roll is depleted, main roll automatically starts dispensing without the need to open the dispenser.

To empty waste receptacle, unlock with key provided.

NOTE: LinerMate™ sold as an optional accessory to accommodate disposable trash liners. LinerMate eliminates unsightly trash liner overhang and facilitates installation and removal of disposable trash liners in the 12-gallon (45.5 L) waste receptacle.

Options:

- Folded Towel Dispenser Module convertible in field: order Bobrick Part No. 3944-52.
- Mechanical (Non-Automatic) Universal Touch-Free Roll Towel Dispenser Module convertible in field: order Bobrick Part No. 3961-50.
- 18-gallon (68 L) Waste Receptacle: order Bobrick Part No. 368-60.
- LinerMate for 12-gal (45.5 L) waste only: order Bobrick Part No. 3944-134.

POWER REQUIREMENTS:

Dispenser is powered by 4 "D" size alkaline batteries (not furnished) or an external 6-volt AC to DC switching power supply. Power supply is an optional accessory: order Bobrick AC Adapter Kit Part No. 3974-57. (For non-U.S. compatible plugs, order Part No. 3974-58).

INSTALLATION:

Provide framed rough wall opening 16" wide x 54-3/4" high (405 x 1390mm). Minimum recessed depth required to finish face of wall is 4" (102mm). Allow clearance for construction features that may protrude into rough wall opening from opposite wall. Coordinate with mechanical engineer to avoid pipes, vents, and conduits. If unit projects above top of wainscot, provide channel or other filler to eliminate gap between flange and finish face of wall. Mount unit in wall opening with shims between framing and cabinet at all points indicated by an S, then secure unit with #8 x 1-1/4" (4.2 x 32mm) sheet-metal screws (not furnished).

Open battery cover at the front of the dispenser and install 4 "D" size alkaline batteries. Select sheet length and "Paper Saver" mode using the switches to the right of the batteries. Load paper towel using the instructions on the dispenser.

Electrical supply for use with 6-volt AC to DC power supply must be installed per applicable building codes.

SPECIFICATION:

Recessed convertible automatic universal roll paper towel dispenser and waste receptacle shall be Type-304 stainless steel with welded construction; exposed surfaces shall have satin-finish. Flange shall be drawn and beveled, one-piece, seamless construction. Door shall be secured to cabinet with a full-length stainless steel piano-hinge and equipped with a concealed tumbler lock keyed like other Bobrick washroom accessories. No-touch dispenser, equipped with an intuitive LED light to direct patrons to the dispense area, dispenses universal, 1-1/2" to 2" (38 to 51mm) diameter core, up to 8" (205mm) diameter, 8" (205mm) wide, non-perforated, non-proprietary paper towel rolls. 800 ft (244 m) long. Dispenser automatically dispenses towel when hands are placed under the towel opening. Dispenser can be powered by 4 "D" size alkaline batteries or an optional 6-volt AC to DC power supply. Equipped with switches that allow paper length to be set at 9" (230mm), 12" (305mm) or 15" (380mm) and "Paper Saver" feature that provides a shorter second sheet with options of 25% shorter and 12.5% shorter. LED light at the towel opening flashes green when dispenser is ready to dispense, flashes orange, indicating low battery, flashes red if not ready to dispense or in need of service. Automatic transfer shall dispense stub roll up to 3-1/2" (90mm) diameter before new main roll is automatically dispensed. Removable waste receptacle shall be secured to cabinet with a tumbler lock, edges hemmed for safe handling, and shall have a minimum capacity of 12-gal. (45.5-L).

Recessed Convertible Automatic Universal Roll Paper Towel Dispenser And Waste Receptacle shall be Model B-3974 of Bobrick Washroom Equipment, Inc., Clifton Park, New York; Jackson, Tennessee; Los Angeles, California; Bobrick Washroom Equipment Company, Scarborough, Ontario; Bobrick Washroom Equipment Pty. Ltd., Australia; and Bobrick Washroom Limited, United Kingdom.

AMERICAN SPECIALTIES, INC.
441 Saw Mill River Road, Yonkers, NY 10701
(914) 476.9000 • (914) 476.0688
www.americanspecialties.com

MODEL №:	8206
ISSUED:	05 JAN 1987
REVISED:	12 SEP 2019

L-SHAPED PHENOLIC FOLD-UP SHOWER STALL SEAT (Pg 2 of 2)

STRENGTH

ASI Shower Seats are designed to meet and exceed 2010 ADA Accessibility Requirements so that fabricated product shall be of adequate strength to support a load minimum of 250 lbs (113,4 kg) and unit shall conform to size and edge clearances as diagrammed. Mounting to the wall is a critical part of the system to meet this requirement. To withstand the shear, tension or pullout, and torsion loads generated by the maximum loading, the fastener system must be adequately sized. Unit is load rated to support a weight of 500 lbs (226,8 kg) at front edge when properly installed and has been tested to successfully hold a weight in excess of 1000 lbs (453,6 kg).

MATERIALS

Tube: 18 gauge (.048" [1,22] thick), type 304 stainless steel, 1" diameter [Ø25] and 1-1/4" [32] square. Unitized all welded construction. Exposed surfaces have satin finish. Edges and corners are radiused and burr free. Frame is field reversible for either left or right hand.

Flange: 3/16" [4,8], type 304 stainless steel. Exposed surfaces have satin finish. Edges are radiused and burr free.

Bracket: 16 gauge (.06" [1,52] thick), type 304 stainless steel. Exposed surfaces have satin finish. Edges and corners are radiused and burr free.

Seat: Solid Phenolic L-shape 1/2" x 33" x 21-1/2" [13 x 838 x 546] nonporous seat has white top and bottom surfaces with semi-gloss finish and black edges with radiused and burr free corners. Seat top shall be field reversible for left or right hand. Seat top shall have slots for water drainage and user slip resistance. Mounting hardware is smooth stainless steel dome head carriage bolts with acorn nuts on bottom.

Spring: Stainless Steel wire, Type 304, OD 27/32" [Ø21,6] Body Coils x 2-1/4" [57,2] Body Length x .085" [Ø2,2] wire diameter.

OPERATION

Fold-up Shower Seat requires only one hand operation to manually lower to horizontal position for use or raise for departure and arrival. Guide bracket with spring detent prevents seat from dropping and provides positive support in usage position as well as spring locked storage position.

BOBRICK

Technical Data

RECESSED HEAVY-DUTY SOAP DISH WITH BAR
(FOR STUD WALLS)

B-4390

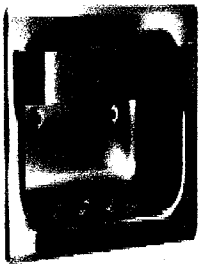

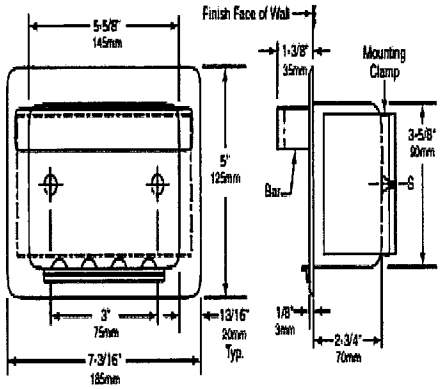

Rough Wall Opening
6" (150mm) wide
4" (100mm) high
4" (100mm) minimum recessed depth

MATERIALS:

Shell and Flange — 18-8, type-304, 19-gauge (1.0mm) stainless steel with matte polished finish. Drawn and beveled, one-piece, seamless construction with two countersunk mounting holes.

Retaining Lip — 18-8, type-304, 22-gauge (0.8mm) stainless steel with matte polished finish.

Bar — 18-8, type-304, 3/16" (4.8mm) thick stainless steel with matte polished finish.

INSTALLATION:

Provide framed rough wall opening 6" wide x 4" high (150 x 100mm). Minimum recessed depth to finish face of wall is 4" (100mm). Insert unit into rough wall opening and center unit in width of opening making sure that the front edges of the mounting clamp are engaged behind the wall material on both sides of the rough wall opening. Secure unit in place by drawing the mounting clamp up to the back surface of the wall material with the mounting screws (2) furnished by Bobrick.

SPECIFICATION:

Recessed heavy-duty soap dish with bar shall be type-304 stainless steel with matte polished finish. Shell and flange shall be 19 gauge (1.0mm) with drawn and beveled, one-piece, seamless construction. Bar shall be 3/16" (5mm) thick stainless steel and is welded to front of shell flange. Unit shall be equipped with a 22-gauge (0.8mm) retaining lip and furnished with machine screws.

Recessed Heavy-Duty Soap Dish With Bar shall be Model B-4390 of Bobrick Washroom Equipment, Inc., Clifton Park, New York; Jackson, Tennessee; Los Angeles, California; Bobrick Washroom Equipment Company, Scarborough, Ontario; Bobrick Washroom Equipment Pty. Ltd., Australia; and Bobrick Washroom Equipment Limited, United Kingdom.

AMERICAN SPECIALTIES, INC.
441 Saw Mill River Road, Yonkers, NY 10701
(914) 476.9000 • (914) 476.0688
www.americanspecialties.com

MODEL №:	0398
ISSUED:	01-87
REVISED:	31 OCT 2016

HEAVY DUTY STAINLESS STEEL SOAP DISH WITH RECTANGULAR SOLID BAR

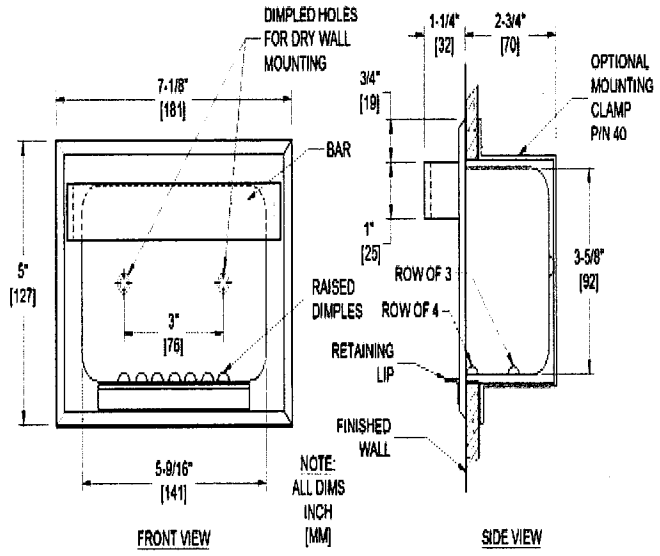

N.T.S.

SPECIFICATION

Heavy Duty Stainless Steel Soap Dish with Rectangular Solid Bar for dry wall mounting shall be formed of 20 gauge alloy 18-8 seamless deep drawn stainless steel, type 304. Exterior shall have polished bright finish. Retaining lip with rounded corners shall be welded to body and shall project 5/8" [16] from bezel. Optional mounting clamp (Model № 40, available separately) shall be fabricated of 18 gauge corrosion protected steel with mounting holes for № 8-32-UNC-2A machine screws (by others). Bar shall be stainless steel with cross section of 3/16" thick x 1" high [5 x 25] with 3/4" [19] radius bends and shall be welded to bezel. Water runoff path shall be provided as pattern of raised dimples on soap shelf and shall prevent soap from slipping.

Heavy Duty Stainless Steel Soap Dish with Rectangular Solid Bar shall be Model № 0398 of American Specialties, Inc., 441 Saw Mill River Road, Yonkers, New York 10701-4913

INSTALLATION

For Standard Recessed Mounting

Use two (2) № 8 stainless steel Philips flat or oval head self tapping or wood screws (by others) of suitable length to penetrate blocking in back of rough wall opening (RWO) by approximately 1/2" [13]. Apply a continuous bead of silicone sealant (by others) behind flange and into screw holes. Tighten screws to hold flange tight against finished wall face. Wipe off excess sealant immediately.

Optional Method for Recessed Mounting

Order separate item Model № 40 dry wall clamp. Apply a continuous bead of silicone sealant (by others) behind flange and into screw holes. Loosely attach clamp to the back of the unit with two (2) stainless steel Phillips flat or oval head № 8-32-UNC-2A machine screws (provided by others to suit wall conditions). Insert into RWO and adjust clamp so that it grips inside wall surface through opening. Secure accessory to clamp and wall by tightening screws. Wipe off excess sealant immediately.

RWO required is..... 6-1/8" W x 4-1/8" H x 4" D [156 x 105 x 102]

OPERATION

Raised dimples on the soap shelf allow water to drain away and provide gripping surface to retain soap.

BOBRICK

Technical Data

LAVATORY-MOUNTED SOAP DISPENSER

B-822

ASI

AMERICAN SPECIALTIES, INC.
441 Saw Mill River Road, Yonkers, NY 10701
(914) 476.9000 • (914) 476.0688
www.americanspecialties.com

MODEL №:	0332
ISSUED:	01-87
REVISED:	09 APR 2019

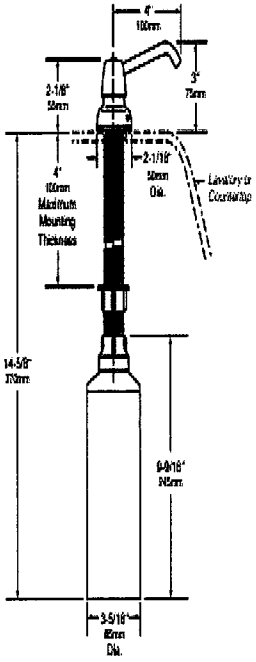

LAVATORY MOUNTED SOAP DISPENSER

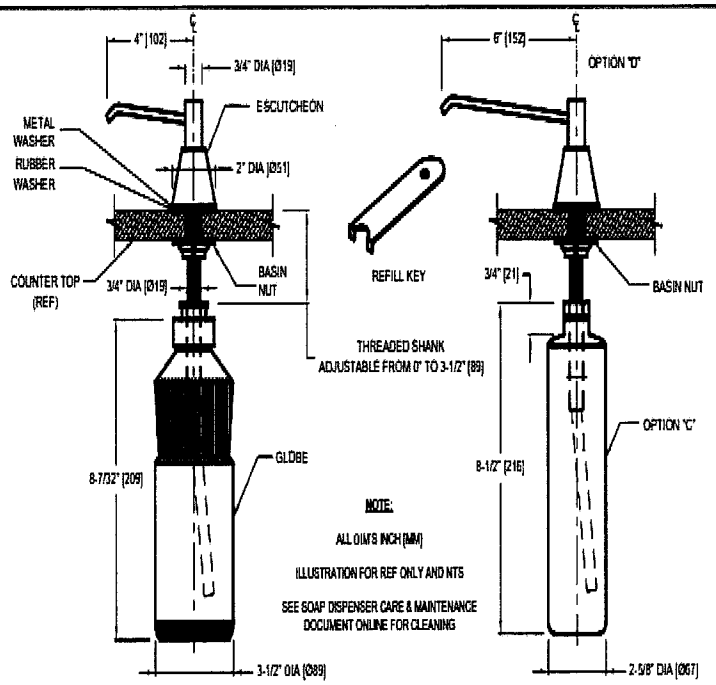

MATERIALS:

Piston, Spout, and Top Cover — Type-304 stainless steel with bright polished finish.

Cover Spacer — Rigid, impact-resistant polyester.

Escutcheon — Chrome-plated, high-impact-resistant ABS with bright polished finish. Concealed locking mechanism.

Body and Shank — High-impact-resistant plastic.

Valve — ABS cylinder. Stainless steel spring. U-packing seal and duckbills.

Container — Translucent, shatter-resistant polyethylene. Capacity: 34-fl oz (1.0-L).

OPERATION:

Press piston down to dispense commercially marketed all purpose hand soaps. Vandal-resistant spout can rotate 360° without damage to unit. Escutcheon locks to body with concealed locking mechanism that is opened with special key provided. To fill from top, unlock cover and remove piston, spout, and supply-tube assembly. Unit may also be filled by removing container from below lavatory.

Designer's Note: Bobrick liquid soap dispensers are designed to dispense commercially marketed all purpose hand soaps including liquid and lotion soaps and synthetic detergents.

INSTALLATION:

Unit is designed for installation in 1" (25mm) diameter hole in porcelain-enameled steel, cast-iron or vitreous-china lavatories, as well as in countertops adjacent to lavatories. Unit may be mounted in unused faucet hole or through special hole requisitioned when lavatory is ordered from manufacturer (specify punching location). Shank accommodates maximum 4" (100mm) mounting thickness and can be cut in the field. Clearance required for container diameter is 3-3/8" (85mm).

SPECIFICATION:

Lavatory-mounted soap dispenser shall dispense commercially marketed all-purpose hand soaps, non-Iodine based soaps and do not use alcohol based sanitisers. Piston and spout assembly shall be Type-304 stainless steel with bright polished finish. Spout shall rotate 360° without damage to valve mechanism. Escutcheon shall lock to body with concealed locking mechanism that is opened with special key provided. Piston, spout, and supply-tube assembly shall be removable from top for filling and maintenance. Valve shall be equipped with plastic cylinder, stainless steel spring, U-packing seal, and duckbills. Shank shall accommodate mounting thicknesses up to 4" (100mm). Translucent, shatter-resistant polyethylene container shall have a capacity of 34-fl oz (1.0-L).

Lavatory-Mounted Soap Dispenser shall be Model B-822 of Bobrick Washroom Equipment, Inc., Clifton Park, New York; Jackson, Tennessee; Los Angeles, California; Bobrick Washroom Equipment Company, Scarborough, Ontario; Bobrick Washroom Equipment Pty. Ltd., Australia; and Bobrick Washroom Equipment Limited, United Kingdom.

SPECIFICATION

Lavatory Mounted Soap Dispenser shall hold and dispense 34 oz (1 L) of liquid soap having a pH in range 7 ± 1.5 and viscosity in range 50-2500 cP (mPa•s). Soaps containing reportable salts, chlorides and alcohol should be avoided. Soap container shall be translucent, shatter resistant polyethylene. Dispenser stem and 4" [102] spout shall be stainless steel with rubber duckbill check valves and an O-ring seal. Valve body, internal parts, basin nut, threaded shank and globe adapter shall be molded plastic. Spring, escutcheon washer, stem retainer collar and screw shall be stainless steel. Escutcheon shall be chrome-plated brass. Vandal-resistant spout shall rotate 360° without damage to unit. Valve operation shall comply with 2010 ADA Accessibility Standards and ICC/ANSI A.117.1 by requiring no more than 5 lbsf (22.2 N) of pressure to actuate without grasping or twisting by operator.

Lavatory Mounted Soap Dispenser shall be Model № 0332 of American Specialties, Inc., 441 Saw Mill River Road, Yonkers, New York 10701-4913

INSTALLATION

Unit is typically located adjacent to a flush mounted lavatory and installed through a 7/8" diameter [Ø22] cut out (by others) in counter top. An adjustable threaded shank allows for installation in counter tops up to 3-1/2" [89] thick.

OPERATION

Dispense soap manually by pushing down on the spout stem. Dispense volume is typically 0.03 fl. oz. (0.8 ml) for liquid soap in correct viscosity range. Dispenser is refilled from above counter top by using the special refill key to unlock the escutcheon and remove the valve body with dip tube from the shank to expose reservoir opening. Pour soap directly into the opening until the level reaches the neck of the reservoir below the vanity.

OPTIONS

Spout option my be combined with globe option. Specify option by adding suffix to Model № (e.g. 0332-CD64).

SUFFIX	DESCRIPTION
C	20 ounce (592 ml) polyethylene globe
D	6" [152] long stainless steel spout
64	1" [25] height chrome plated spacer (not shown)

BOBRICK

Technical Data

VINYL SHOWER CURTAINS

204-2
204-3

Specify Part Required: ☐ 204-2 42" wide x 72" high (1065 x 1830mm)
☐ 204-3 70" wide x 72" high (1780 x 1830mm)

MATERIALS:

Opaque, matte white vinyl 0.008" (0.2mm) thick, containing antibacterial and flame-retardant ageots. White HDPE grommets along top, ooe every 6" (150mm). Bottom and sides are hemmed.

OPERATION:

Hooks available as optional accessory: order Bobrick Part No. 204-1. 204-2 shower curtain, 42" wide x 72" high (1065 x 1830mm), requires 7 hooks. 204-3 shower curtain, 70" wide x 72" high (1780 x 1830mm), requires 12 hooks.

INSTALLATION:

Recommended for use with Bobrick stainless steel shower curtain hooks on Bobrick stainless steel shower curtain rods: Models B-207, B-4207, B-6047 and B-6107.

SPECIFICATION:

Shower curtains shall be opaque, matte white vioyl 0.008" (0.2mm) thick, contaioing antibacterial and flame-retardant agents (Formulated to meet CFSM Title 19.13115), and shall have white HDPE grommets along top. Bottom and sides shall be hemmed.
NFPA-701 certified.

Vinyl Shower Curtains shall be Model _____ (insert model number) of Bobrick Washroom Equipment, Inc., Clifton Park, New York; Jackson, Tennessee; Los Angeles, California; Bobrick Washroom Equipment Company, Scarborough, Ontario; Bobrick Washroom Equipment Pty. Ltd., Australia; and Bobrick Washroom Equipment Limited, United Kingdom.

ASI **AMERICAN SPECIALTIES, INC.**
441 Saw Mill River Road, Yonkers, NY 10701
(914) 476.9000 • (914) 476.0688
www.americanspecialties.com

MODEL №:	1200-V
ISSUED:	01-87
REVISED:	03 JUN 2019

VINYL SHOWER CURTAIN

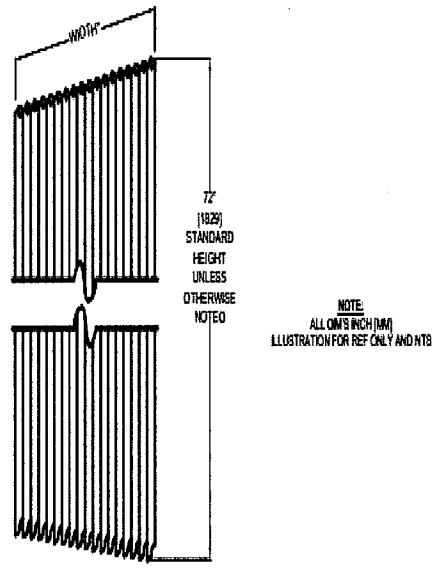

SPECIFICATION

Shower Curtain shall be fabricated of .00825" [0,21] thick PVC sheet treated with a broad spectrum antimicrobial agent to inhibit the growth of fungal, bacterial and algal organisms. Protection agents shall remain in effect after repeated low-temperature mild soap washing and air-drying cycles. Top hem shall be 1-1/2" [38] wide, backing reinforced and heat-sealed above and below grommet row. Bottom hem and vertical edges shall be plain edge. Clear anodized aluminum grom-mets with 3/8" inside diameter [Ø9,5] shall be machined into top hem at 6-1/2" ± 1/2" [165 ± 13] intervals on centers starting at 1-1/4" ± 1/4" [32 ± 6] from edges. Color shall be white. Pattern is San Suede Pebble Emboss № SS9700. Effective inhi-bition has been demonstrated via testing in accordance with ASTM G2190, ASTM E1428 and AATCC Test Method 147-1998.

Vinyl Shower Cortain shall he Model № 1200-Vxx (specify size per chart) of American Specialties, Inc., Yonkers, NY 10701-4913

INSTALLATION

For openings up to 42" [1067] wide curtains should be specified an additional 6" [152] wider than opening and 12" [305] wider for openiogs exceeding 42" [1067]. Shower curtain should be attached with hooks (not provided, order separately) to rod (not provided, order separately). Curtain hooks Model № 1200-SHU are recommended.

SIZE SPECIFICATION

OPENING	XX	OPENING	XX	OPENING	XX
30" [762]	36" [914]	42" [1067]	48" [1219]	60" [1524]	72" [1829]
36" [914]	42" [1067]	48" [1219]	60" [1524]	72" [1829]	84" [2134]

HOOKS COUNT (1200-SHU SUGGESTED) REQUIRED

CURTAIN WIDTH	HOOK COUNT	CURTAIN WIDTH	HOOK COUNT	CURTAIN WIDTH	HOOK COUNT
36" [914]	6	48" [1219]	8	72" [1829]	12
42" [1067]	7	60" [1524]	10	84" [2134]	14

BOBRICK

Technical Data

MIRROR WITH STAINLESS STEEL CHANNEL FRAME

B-165 SERIES

Designer's Notes:

1. Special-order sizes available on request.
2. Maximum size mirror available: 96" x 72" (244 x 183cm); minimum size, 12" x 12" (30 x 30cm).
3. All Bobrick framed mirrors are manufactured to overall width and height dimensions. EXAMPLE: A 24" x 36" (61 x 91cm) mirror will be furnished 24" x 36" (61 x 91cm) outside-of-frame to outside-of-frame.
4. To specify special sizes use Series Number followed by width x height in inches. EXAMPLE: B-165 2024 20" x 24" (51 x 61cm)
5. Bobrick framed mirrors are manufactured to a tolerance 1/8" (3.2mm).
6. For sufficient space to lift mirror onto wall hanger(s), provide 1" (25mm) minimum clearance above top of mirror frame.
7. Provide 1" (25mm) minimum clearance at bottom of mirror for unlocking mirror from wall and 1/2" (12.7mm) minimum clearance on each side.

Snap Locking Design (Rear View)

Figure: 1

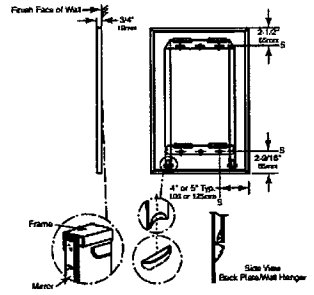

STANDARD B-165 SERIES MIRRORS		
MODEL NO.	OVERALL SIZE W	H
B-165 1824	18" (46cm)	24" (61cm)
B-165 1830	18" (46cm)	30" (76cm)
B-165 1836	18" (46cm)	36" (91cm)
B-165 2430	24" (61cm)	30" (76cm)
B-165 2436	24" (61cm)	36" (91cm)
B-165 2448	24" (61cm)	48" (122cm)
B-165 2460	24" (61cm)	60" (152cm)

Lock Tab Design (Rear View)

Figure: 2

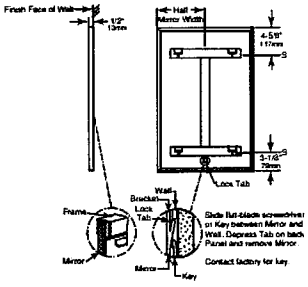

STANDARD B-165 SERIES MIRRORS		
MODEL NO.	OVERALL SIZE W	H
B-165 4836	48" (122cm)	36" (91cm)
All Other Size Mirrors		

Note: Mirrors greater than 30" in width will have multiple hanger brackets with a typical 8" off each edge.

Width	Hanger Pockets
Up to 30" (76cm)	1
Over 30" up to 72" (76 to 183cm)	2
Over 72" up to 96" (183 to 274cm)	3

continued . . .

MATERIALS:

Frame — Type-430 stainless steel, 1/2" x 1/2" x 3/8" (13 x 13 x 9.5mm) channel with 1/4" (6mm) return at rear for Snap Locking Design; 1/2" x 1/2" x 1/2" (13 x 13 x 13mm) channel for Lock Tab Design, with bright polished finish. One piece frame with 90 degree mitered corners. Galvanized steel back has integral horizontal hanging brackets near the top for hanging the mirror and near the bottom to prevent the bottom of the mirror from pulling away from the wall. Locking devices secure mirror to concealed wall hanger.

Mirror — No. 1 quality, 1/4" (6mm) select float glass selected for silvering, electrolytically copper-plated by the galvanic process, and guaranteed for 15 years against silver spoilage. Back is protected by full-size, shock-absorbing, water-resistant, nonabrasive, polyethylene padding.

Concealed Wall Hanger — 16 gauge cold roll steel construction. Incorporates upper and lower support members, which engage backplate louvers to keep mirror against wall.

INSTALLATION:

Mount wall hanger on wall with screws (not furnished) at points indicated by an *S*. For plaster or dry wall construction, provide backing to comply with local building codes, then secure wall hanger with screws (not furnished). When providing a concealed backing, allow backing to cover minimum range of mounting hole locations shown on drawing. For other wall surfaces, provide fiber plugs or expansion shields for use with screws (not furnished), or provide 1/8" (3mm) toggle bolts or expansion bolts. Hang mirror on wall hanger with all four backplate louvers engaged behind horizontal wall hanger members. To do this, mirror must be centered in front of the wall hanger horizontally, pressed flat against the wall approximately 1" (25mm) above final position and then lowered into final position.

Snap Locking Design — Locking devices automatically secure mirror to concealed wall hanger when it is lowered into final position (see figure 3). Locking devices may be unlocked by inserting two flat blade screwdrivers behind each side of mirror near the bottom or under the bottom of the mirror and pulling mirror bottom forward and then up.

Lock Tab Design — Locking devices automatically secure mirror to concealed wall hanger when it is lowered into final position (see figure 4). Locking device may be unlocked by sliding a flat-blade screwdriver or Key between mirror and wall at center of mirror and depressing tab on back panel. If key is required, please contact the factory.

Snap Locking Design (Front View)

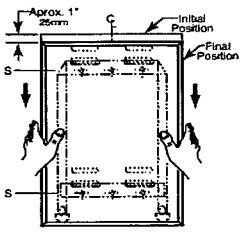

Figure: 3

Lock Tab Design - Up to 30" Width (Front View)

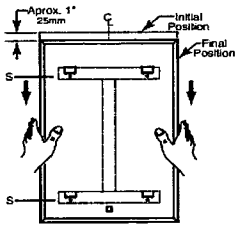

Figure: 4

SPECIFICATION:

Mirror shall have a one-piece type-430 stainless steel channel frame, with 90° mitered corners; all exposed surfaces shall have bright polished finish. Select float glass mirror shall be guaranteed for 15 years against silver spoilage. The back shall be protected by full-size, shock-absorbing, water-resistant, nonabrasive, polyethylene padding. Galvanized steel back shall have integral horizontal hanging brackets located at top and bottom for mounting on concealed wall hanger to prevent the mirror from pulling away from the wall. Locking devices secure mirror to concealed wall hanger. Mirror shall be removable from the wall.

Framed Mirror shall be Model B-165 _____ (insert width and height) of Bobrick Washroom Equipment, Inc., Clifton Park, New York; Jackson, Tennessee; Los Angeles, California; Bobrick Washroom Equipment Company, Scarborough, Ontario; Bobrick Washroom Equipment Pty. Ltd., Australia; and Bobrick Washroom Equipment Limited, United Kingdom.

AMERICAN SPECIALTIES, INC.
441 Saw Mill River Road, Yonkers, NY 10701
(914) 476.9000 • (914) 476.0688
www.americanspecialties.com

MODEL №:	0620
ISSUED:	01-87
REVISED:	18 JUL 2019

CHANNEL FRAME MIRROR

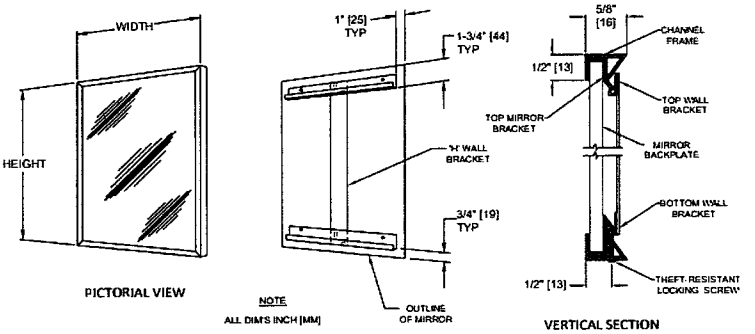

FOR CLEANING INSTRUCTIONS SEE APPROPRIATE SECTIONS IN PRODUCT CARE & MAINTENANCE BULLETIN (PCM) ON ASI WEBSITE

SPECIFICATION

Channel Frame Mirror shall have frame of 20 gauge type 304 stainless steel alloy 18-8, with mitered corners. Mirror glazing shall be _____ (insert glazing option) and shall be warranted for 15 years against silver spoilage. All edges of mirror shall be protected by friction and chafe absorbing fillers. Back of mirror shall be protected by full size shock-absorbing water-resistant filler and full size one piece 20 gauge corrosion protected steel. Top and bottom wall mounting brackets shall be 20 gauge corrosion protected steel and shall be spot welded into **"H"** hanger. Mirror shall be secured to lower bracket with a Phillips Pan Head locking screw.

Channel Frame Mirror shall be Model № 0620-_____(insert glazing option)_____ (note size, W x H) as manufactured by American Specialties, Inc., 441 Saw Mill River Road, Yonkers, New York 10701-4913

MATERIALS

Frame: 20 gauge type 304, 18-8, stainless steel. Roll-formed one piece construction. Exposed surfaces shall be satin finish. Edges and corners are burr free.

Glass: Standard glazing is № 1 quality, 1/4" [6,4] thick plate/float, silver coated and hermetically sealed with a uniform copper plating, and warranted against silver spoilage for 15 years. Mirrors meet Federal Spec DD-M-411C, ASTM C- 1503, and ASTM C-1036-91.

Filler: Expanded polyethylene microcell foam sheet material, abrasion resistant and shock absorbing, water resistant, 1/8" [3.2] total layer thickness.

FABRICATION NOTE FOR SPECIFICATION

Mirrors larger than 32sq. Ft. [2.97m^2] are fabricated in two (2) or more sections to provide installation and handling ease.

INSTALLATION

Install "H" wall brackets level and plumb per diagram location using **ONLY** № 8 or № 10 Pan Head screws (by others). Hang mirror on brackets and tighten locking screw (№ 6-32F x 3/4" Philips Pan Head, supplied separately taped to mirror back) at bottom (note: this screw should be started prior to hanging mirror on wall bracket). For compliance with 2010 ADA Accessibility Standards and ABA Standards 2015, bottom edge of reflecting surface should be no higher than 40" [1016] AFF (Above Finished Floor).

GLAZING OPTIONS

Units are supplied with 1/4" [6] thick plate glass. Other glazing options are available. For a complete description of any other available glazing, see the **MIRROR GLAZING OPTIONS** chart.

PRODUCT SUBSTITUTION REQUEST FORM

Project: ITB- Tarrant County Arlington Sub Courthouse Finish out & Renovation

To: LBL Architects Inc.

Reference: Metal Lockers

Substitution Request No:

From: Specialties Direct Inc.

Date: 7/2/2021

A/E Project No:

Contract For:

Specification Title: Metal Lockers

Section: 10 51 13 Page: 10 51 13-1 Article / Paragraph: 2.01, A, 1

Proposed Substitution: ASI Storage Solutions

Manufacturer: ASI Storage Solutions Address: 900 Clary Connector Eastanollee, GA 30538

Telephone: (706) 827-2720 Proposed Model No.: Traditional Plus Collection

Attached data includes product description, specifications, drawings, photographs, and performance and test data adequate for evaluation of the request; applicable portions of the data are clearly identified.

Attached data also includes a description of changes to the Contract Documents that the proposed substitution will require for its installation.

The undersigned certifies:

- Proposed substitution has been fully investigated and determined to be equal or superior in all respects to specified product.
- Same warranty will be furnished for proposed substitution as for specified product.
- Same maintenance service and source of replacement parts, as applicable, is available.
- Proposed substitution will have no adverse effect on other trades and will not affect or delay progress schedule.
- Proposed substitution does not affect dimensions and functional clearances.
- Payment will be made for changes to building design, including A/E design, detailing, and construction costs caused by substitution.

Submitted By: Debra Neal

Signed : Debra Neal

Firm: Specialties Direct Texas Inc

Address: 1102 Avenue T Grand Prairie 75050

Phone: o: 214-412-2644 / c: 706-491-9670

A/E's REVIEW & ACTION

- ☐ Substitution approved – Make submittals in accordance with Project Manual requirements.
- ☐ Substitution approved as noted – Make submittals in accordance with Project Manual requirements.
- ☑ Substitution rejected – Use specified materials.
- ☐ Substitution Request received too late – Use specified materials.

A/E Signature: Date: 7-27-21

Supporting Data Attached: ☐ Drawings ☐ Product Data ☐ Samples ☐ Tests ☐ Reports ☐

END OF REQUEST FORM

ASI Storage Solutions

October 30, 2019

ASI Storage Solutions warrants that its products will be free of defects in material or workmanship under normal usage from the date of invoice for a period as stated below.

Metal Lockers: One (1) year against chipping, flaking, or cracking

Black Core/Color-Thru Phenolic Lockers: Ten (10) years against delamination, breakage, or corrosion

Solid Plastic (HDPE) Lockers: Fifteen (15) years against delamination, breakage, or corrosion

If material is found to be defective during the above period, the material shall be repaired or replaced (at ASI Storage Solutions' discretion) free of charge, and shall include freight to original destination point only. Installation or removal is not included.

No credits or allowances shall be issued for any labor or expenses relating to the repair or replacement of components covered under the warranty plan. The repair or replacement of material shall be the sole remedy of purchaser and ASI Storage Solutions shall not be liable for incidental, consequential, or indirect damages caused by any defects in the product or any delay in repairing or replacing defective product.

These warranties shall not be applicable if vandalism, improper installation, or improper cleaning/maintenance of lockers have contributed as just cause for the product failure. These warranties extend to commercial and industrial purchasers and do not extend to any other persons, including consumers of the lockers. These warranties are in lieu of all other warranties, express or implied, including any implied warranty of merchantability or fitness for a particular purpose or otherwise.

900 Clary Connector. Eastanollee, GA 30538
www.asi-storage.com
Tel: 706.827.2720
Fax: 706.827.2710

Specifications

Traditional Collection

STANDARD

PART 1: GENERAL

1.01 Work Included

A.The lockers shall be powder-coated steel as manufactured by ASI Storage Solutions, Eastanollee, GA 30538.

B. Furnish all labor and materials for completion of work in this section as shown in the approved drawings and specified herein.

PART 2: PRODUCT

2.01 Material - All major steel parts shall be of mild cold rolled commercial quality steel.

2.02 Finish - All material shall be power washed and phosphate treated for maximum finish color adhesion. All components shall be finished with a 2 mm hybrid epoxy/polyester powder, electrostatically applied to ensure uniform thickness and baked to cure.

2.03 Construction - All lockers shall be built on a unit principle with common intermediate uprights separating units.

2.04 Door Frames - Shall be 16 gauge formed in a channel shape. Vertical members shall have additional flange to provide a continuous door strike. Cross frame members shall also be 16 gauge channel shaped, including intermediate cross frames on double and triple tier lockers.

2.05 Doors - Shall be 16 gauge, with louvers for ventilation channel shaped on both the lock and hinge side, with angle formations across the top and bottom.

2.06 Body - Bottoms shall be 16 gauge. Tops, sides, backs and shelves shall be 24 gauge. Bolt spacing shall not exceed 9" o.c.

2.07 Hinges - Shall be full length 16 gauge continuous piano type riveted to both door and frame.

2.08 Handles - Shall be one-piece 20 gauge deep drawn stainless steel cup designed to accommodate locks.

2.09 Latching - On single, double, triple, and two person lockers the lifting trigger shall be 14 gauge steel, attached to the latching channel. The trigger shall have a padlock eye for use with 9/32" diameter padlock shackle. Doors to have latch clip engaging frame at three points on doors over 42" high and two points on all other doors. Locking device to be positive automatic type, whereby locker door may be locked when open, then closed without unlocking. A rubber silencer shall be firmly secured to the frame at each latch hook.

Four, five and six tier lockers shall have an 11 gauge frame hook secured to the frame. The frame hook shall have a padlock hasp protruding through the recessed handle.

2.10 Interior Equipment - Single tier lockers 48" or higher shall have a shelf. If under 18" deep, locker shall have three wall hooks and one ceiling hook. Single tier lockers 18" deep or more shall have a coat rod instead of a ceiling hook. Double tier lockers shall have three wall hooks and one ceiling hook. Triple tier lockers shall have three wall hooks for 12" and 4 wall hooks for 15" and wider lockers.

2.11 Number Plates - Each locker shall have a polished aluminum number plate riveted to door face with black numerals ½" high.

2.12 Color - Doors and exposed body parts shall be selected from ASI's standard designer color range. Non-exposed body parts shall be finished in #03 Almond.

2.13 Assembly - All locker components shall be assembled by use of rivets.

PART 3: EXECUTION

3.01 Installation - Lockers shall be installed in accordance with ASI's installation instructions and shall be level and plumb with flush surfaces and rigid attachment to anchoring surfaces.

Traditional Plus Collection

HEAVY DUTY

PART 1: GENERAL

1.01 Work Included

A.The lockers shall be powder-coated steel as manufactured by ASI Storage Solutions, Eastanollee, GA 30538.

B. Furnish all labor and materials for completion of work in this section as shown in the approved drawings and specified herein.

PART 2: PRODUCT

2.01 Material - All major steel parts shall be of mild cold rolled commercial quality steel.

2.02 Finish - All material shall be power washed and phosphate treated for maximum finish color adhesion. All components shall be finished with a 2 mm hybrid epoxy/ polyester powder, electrostatically applied to ensure uniform thickness and baked to cure.

2.03 Construction - All lockers shall be built on a unit principle with common intermediate uprights separating units.

2.04 Door Frames - Shall be 16 gauge formed in a channel shape. Vertical members shall have additional flange to provide a continuous door strike. Cross frame members shall also be 16 gauge channel shaped, including intermediate cross frames on double and triple tier lockers.

2.05 Doors - Shall be 14 gauge, channel shaped on both the lock and hinge side, with angle formations across the top and bottom. One, Two and Three tier locker doors shall have a 16 gauge full height reinforcement channel.

2.06 Body - Bottoms shall be 16 gauge. Tops, sides, backs and shelves shall be 24 gauge. Bolt spacing shall not exceed 9" o.c.

2.07 Hinges - Shall be full length 16 gauge continuous piano type riveted to both door and frame.

2.08 Handles - Shall be one-piece 20 gauge deep drawn stainless steel cup designed to accommodate locks.

2.09 Latching - Single, double and triple tier lockers shall have an 11 gauge frame hook secured to the frame. The frame shall have a padlock hasp protruding through the recessed handle. A rubber silencer shall be firmly secured to the frame at each latch hook.

2.10 Interior Equipment - Single tier lockers 48" or higher shall have a shelf. If under 18" deep, locker shall have three wall hooks and one ceiling hook. Single tier lockers 18" deep or more shall have a coat rod instead of a ceiling hook. Double tier lockers shall have three wall hooks and one ceiling hook. Triple tier lockers shall have three wall hooks for 12" and 4 wall hooks for 15" and wider lockers.

2.11 Number Plates - Each locker shall have a polished aluminum number plate riveted to door face with black numerals ½" high.

2.12 Color - Doors and exposed body parts shall be selected from ASI's standard designer color range. Non-exposed body parts shall be finished in #03 Almond.

2.13 Assembly - All locker components shall be assembled by use of rivets.

PART 3: EXECUTION

3.01 Installation - Lockers shall be installed in accordance with ASI's installation instructions and shall be level and plumb with flush surfaces and rigid attachment to anchoring surfaces.

Competitor Collection

ATHLETIC

PART 1: GENERAL

1.01 Work Included

A.The lockers shall be powder-coated steel as manufactured by ASI Storage Solutions, Eastanollee, GA 30538.

B. Furnish all labor and materials for completion of work in this section as shown in the approved drawings and specified herein.

PART 2: PRODUCT

2.01 Material - All major steel parts shall be of mild cold rolled commercial quality steel.

2.02 Finish - All material shall be power washed and phosphate treated for maximum finish color adhesion. All components shall be finished with a 2 mm hybrid epoxy/ polyester powder, electrostatically applied to ensure uniform thickness and baked to cure.

2.03 Construction - All lockers shall be built on a unit principle with common intermediate uprights separating units.

2.04 Door Frames - Shall be 16 gauge formed in a channel shape. Vertical members shall have additional flange to provide a continuous door strike. Cross frame members shall also be 16 gauge channel shaped, including intermediate cross frames on double and triple tier lockers.

2.05 Doors - Shall be 14 gauge, channel shaped on both the lock and hinge side with angle formations across the top and bottom. Single, double and triple tier locker doors shall have a 16 gauge full height reinforcement channel.

2.06 Ventilation - All locker sides and doors 20" or higher shall be perforated with diamond-shaped openings ¾" wide x 1-1/2" high in a quantity and pattern to ensure maximum ventilation and maintain structural strength. All other doors shall have small diamond-shaped perforations 7/16" wide x 15/16" high.

2.07 Body - Backs shall be 18 gauge; all other body parts shall be 16 gauge. Bolt spacing shall not exceed 9" o.c.

2.08 Hinges - Shall be full length 16 gauge continuous piano type riveted to both door and frame.

2.09 Handles - Shall be one-piece 20 gauge deep drawn stainless steel cup designed to accommodate locks.

2.10 Latching - All lockers shall have an 11 gauge frame hook secured to the frame. The frame hook shall have a padlock hasp protruding through the recessed handle. A rubber silencer shall be firmly secured to the frame at each latch hook.

2.11 Interior Equipment - Single tier lockers 48" or higher shall have a shelf. If under 18" deep, locker shall have three wall hooks and one ceiling hook. Single tier lockers 18" deep or more shall have a coat rod instead of a ceiling hook. Double tier lockers shall have three wall hooks and one ceiling hook. Triple tier lockers shall have three wall hooks and one ceiling hook. Triple tier lockers shall have three wall hooks for 12" wide and 4 wall hooks for 15" and wider lockers.

2.12 Number Plates - Each locker shall have a polished aluminum number plate riveted to door face with black numerals ½" high.

2.13 Color - Doors, Frames, and all body parts shall be finished in same color.

2.14 Assembly - All locker components shall be assembled by use of rivets.

PART 3: EXECUTION

3.01 Installation - Lockers shall be installed in accordance with ASI's installation instructions and shall be level and plumb with flush surfaces and rigid attachment to anchoring surfaces.

Pro Collection

STADIUM

PART 1: GENERAL

1.01 Work Included

A.The lockers shall be powder-coated steel as manufactured by ASI Storage Solutions, Eastanollee, GA 30538.

B. Furnish all labor and materials for completion of work in this section as shown in the approved drawings and specified herein.

PART 2: PRODUCT

2.01 Material - All major steel parts shall be of mild cold rolled commercial quality steel.

2.02 Finish - All material shall be power washed and phosphate treated for maximum finish color adhesion. All components shall be finished with a 2 mm hybrid epoxy/ polyester powder, electrostatically applied to ensure uniform thickness and baked to cure.

2.03 Construction - All lockers shall be built on a unit principle.

2.04 Locker Frames - Shall be 16 gauge formed in a channel shape.

2.05 Ventilation - Open front; side shall be diamond perforated.

2.06 Body - Tops, bottoms, sides and shelves shall be 16 gauge; backs shall be 18 gauge. Bottoms shall have two welded reinforcement channels. Bolt spacing shall not exceed 9" o.c.

2.07 Interior Equipment - Each locker shall have one coat rod, two coat rod holders, and two single wall hooks.

2.8 Number Plates - Each locker shall have a polished aluminum number plate riveted to door face with black numerals ½" high.

2.9 Color - Doors, Frames, and all body parts shall be finished in same color.

2.10 Assembly - All locker components shall be assembled by use of rivets.

OPTIONS

2.11 Security Box - 14 gauge lockable door with a 16 gauge side panel. The door shall be attached to a welded frame with a continuous hinge. The hinge shall be mounted to door with aluminum rivets. The door shall have a recessed handle. Security box door frame members to be not less than 16 gauge formed to a channel shape. Vertical members shall have an additional flange to provide a continuous door strike.

2.12 Footlocker - Front footlocker panel shall include a single point latch with padlock strike plate and mini louvers. Footlocker top shall have a continuous hinge. Opening and closing shall be quieted by rubber bumpers mounted to the contact points. Seat shall be strengthened with two reinforcement channels welded to bottom of seat. Two side seat supports shall be fastened to side panels and inserted in a support tab on the front locker panel for added strength.

PART 3: EXECUTION

3.01 Installation - Lockers shall be installed in accordance with ASI's installation instructions and shall be level and plumb with flush surfaces and rigid attachment to anchoring surfaces.